844-E
SPRAYER CONTROL

USER MANUAL

Installation, Programming and Operating

TeeJet 844-E
SPRAYER CONTROL
Auto
Man
1
2
3
4
5

TeeJet® TECHNOLOGIES

A Subsidiary of Spraying Systems Co.®

Table of Contents

CHAPTER 1 - INTRODUCTION 1

CHAPTER 2 - MOUNTING SPRAYER COMPONENTS 2
- Pressure Regulator in Bypass Mode ... 2
- Pressure Regulator in Throttling Mode ... 3
- Flow Meter ... 4
- Boom Control Valves ... 4
- Pressure Transducer ... 4

INSTALLING THE SPEED SENSOR ASSEMBLY 5
    - Components ... 5
- Speed Step 1 - Location ... 5
    - Proximity Sensor (optional) ... 5
- Speed Step 2 - Installing The Wheel Magnets ... 6
- Speed Step 3 - Installing the Magnetic Sensor ... 6
- Speed Step 4 - Confirming Speed Sensor Installation ... 7
    - Magnetic Wheel Sensor ... 7
    - Radar ... 7

MOUNTING THE TEEJET 844 CONSOLE 7
- Console Step 1 - Location ... 7
- Console Step 2 - Mounting ... 7
- Console Step 3 - Power Connection ... 8
- Console Step 4 - Connecting Component Cables ... 9
- Connect Step 1 - Wiring Layout ... 10
- Connect Step 2 - Making The Connection ... 11

CHAPTER 3 - PROGRAMMING 13
- Important Preliminary Information ... 13
- Steps to Successful Programming ... 13

SYSTEM SETUP MODE 14
- Program Units ... 14
    - Setting Your Program Mode (U.S., Turf, NH_3, Imperial, S.I.) ... 14
- Reset Defaults ... 14
    - Reset To Default Settings ... 14
- Sensor Type ... 14
    - Flow Meter or Pressure Based ... 14
- Flow Meter Calibration ... 14
    - Flow Meter Pulses ... 14
- Pressure Transducer ... 15
    - Maximum rating (P Hi) ... 15
    - Low Pressure Calibration (P rEF) ... 15
- Nozzle Spacing ... 15
- Tips Per Boom Section ... 15
    - Number of Spray Tips Per Boom Section ... 15

User Program Tip....16
    User Programmable Tip....16
Pressure Regulation....16
    Pressure Regulation Mode....16
Regulation Adjustment Speed....17
Control Valve Type....17
    Boom Control Valve Type: 2-Way/3-Way....17
Calibrate Speed....18
    Speed Sensor Calibration....18
    Proximity/Magnetic Pulses....18
        Automatic Calibration....*18*
        Manual Calculation:....*18*
Radar Speed Pulses....18
    Automatic Calibration:....18
        Manual Calculation:....*18*
Distance Counter....19
Simulated Ground Speed....19
Program Specific Gravity....19
Liquid Specific Gravity (Density)....19
Communications....20
Minimum Pressure....20
    Minimum Regulating Pressure Setting....20

APPLICATION SETUP MODE 20

Target Application Rate....20
Nozzle Selection....21
        Required Speed to Achieve the Application Rate....*21*
Calculation Troubleshooting....22
    Adjust Speed:....22
    Adjust Pressure:....22
    Liquid Density:....22

CHAPTER 4 - OPERATING INSTRUCTIONS 23

Sprayer Checkout....23
The Spraying Operation....23

CHAPTER 5 - FEATURES 24

Boost Mode....24
Area/Volume Feature....24
Flow Rate Feature....24
Application Alarm....24
No Flow Alarm....24
Printing....25

CHAPTER 6 - TROUBLESHOOTING GUIDE 26

CHAPTER 7 - FLOW METER CALIBRATION 29
Method 1 – Known Volume 29
Step 1 – Known Value 29
Step 2 – Programming Calibration Number 29
Step 3 – Resetting Volume Counter 29
Step 4 – Spraying Known Volume 29
Step 5 – Entering in New Flow meter Calibration Number 29
Step 6 – Double-checking the New Value 29
Method 2 – Known Tip Size Method 29
Step 1 – Check Tip Size 29
Step 2 – Count Tips 29
Step 3 – Calculated Flow 29
Step 4 – Measure 30
Step 5 – Adjustments 30

Copyrights

© 2013 TeeJet Technologies. All rights reserved. No part of this document or the computer programs described in it may be reproduced, copied, photocopied, translated, or reduced in any form or by any means, electronic or machine readable, recording or otherwise, without prior written consent from TeeJet Technologies.

Trademarks

Unless otherwise noted, all other brand or product names are trademarks or registered trademarks of their respective companies or organizations.

Limitation of Liability

TEEJET TECHNOLOGIES PROVIDES THIS MATERIAL "AS IS" WITHOUT WARRANTY OF ANY KIND, EITHER EXPRESSED OR IMPLIED. NO COPYRIGHT LIABILITY OR PATENT IS ASSUMED. IN NO EVENT SHALL TEEJET TECHNOLOGIES BE LIABLE FOR ANY LOSS OF BUSINESS, LOSS OF PROFIT, LOSS OF USE OR DATA, INTERRUPTION OF BUSINESS, OR FOR INDIRECT, SPECIAL, INCIDENTAL, OR CONSEQUENTIAL DAMAGES OF ANY KIND, EVEN IF TEEJET TECHNOLOGIES HAS BEEN ADVISED OF SUCH DAMAGES ARISING FROM TEEJET TECHNOLOGIES SOFTWARE.

CHAPTER 1 - INTRODUCTION

Congratulations! And thank you for choosing TeeJet Technologies' advanced 844-E sprayer control system. With its proper installation and maintenance, you can enjoy many seasons of accurate and uniform spray application with fingertip convenience and ease of operation.

Installation and Programming of your control system will be covered in easy to follow, step-by-step instructions.

WE RECOMMEND THAT YOU READ THESE INSTRUCTIONS COMPLETELY

> *before attempting installation and programming of your 844 sprayer control. The unit's performance will depend on its proper installation and programming, along with planned preventative maintenance of your entire sprayer.*

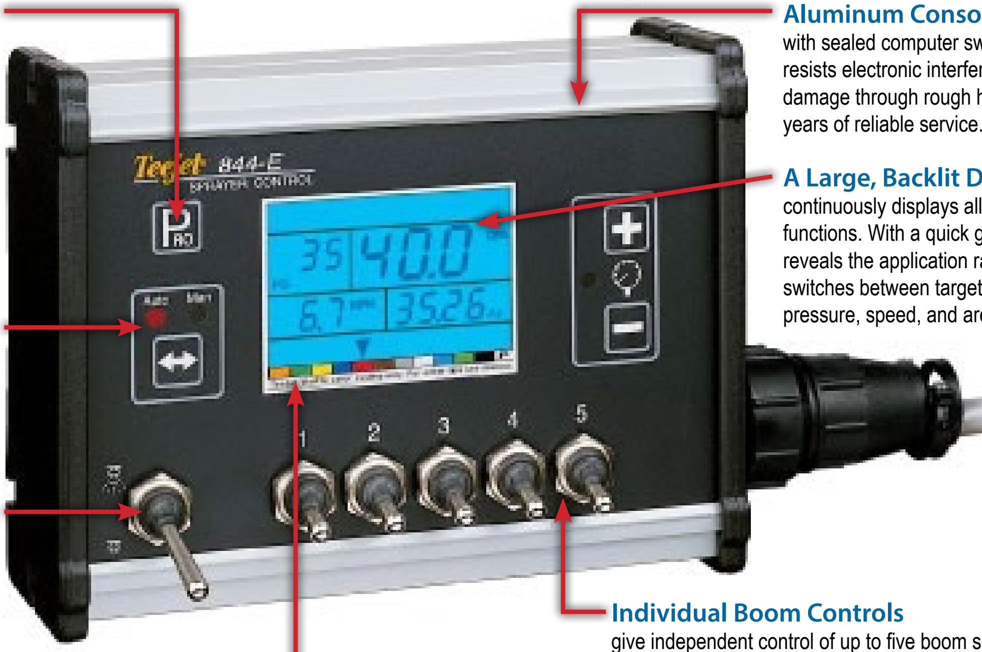

Easily Accessible Programming Mode is very user-friendly. The process is made simple with a series of easy-to-follow, symbol-driven programming steps.

Aluminum Console Housing with sealed computer switch panel resists electronic interference and damage through rough handling for years of reliable service.

Auto/Manual Control gives the operator a manual application option for fail-safe reliability.

A Large, Backlit Display continuously displays all vital spraying functions. With a quick glance, the display reveals the application rate (automatically switches between target and actual), pressure, speed, and area covered.

Master Shutoff controls all boom sections with one switch.

Individual Boom Controls give independent control of up to five boom sections, allowing better management of varying field features like waterways and terraces.

Color-Coded Tip Selection Bar allows for easy user programming by matching the color of TeeJet VisiFlo® spray tips.

- Full-featured sprayer control with industry-leading ease of use
- Large back-lit display shows all spraying information at a glance
- Color-coded tip selection for easy programming
- Communication Port for PC and GPS interfacing
- Flow or pressure based regulation options provide reliability and flexibility
- Five boom section switches plus master shutoff
- Built in application planning tool
- Durable, weather-resistant aluminum housing
- Single cable connection for quick hookup

CHAPTER 2 - MOUNTING SPRAYER COMPONENTS

Pressure Regulator in Bypass Mode

All pressure regulating valves for the 844 will be wired for use in a by-pass system. While plumbed in a by-pass mode, with the Auto/Manual key in the "MAN" mode, the valve should close when the Plus key ⊞ is pressed and open when the Minus key ⊟ is pressed.

The pressure regulating valve can also be mounted in a throttling situation as an alternative location. Refer to pages 3 and 4, and Figures 3 and 4.

NOTE: The diagrams in Figures 1 and 2 are shown as general guidelines to follow when plumbing the 844 components. The type of pump used and location of other components can vary from sprayer to sprayer. It is important to ensure that if a pressure transducer is used, it is located as close to the spray tips as possible. Normally, this is at the boom control valves. However, if one particular boom section is always used, the pressure transducer can be mounted on that particular boom section. If a flow meter is used, make sure that all of the flow going through the flow meter is directed to the spray tips. Make sure that proper distance is allowed on the inlet and outlet side of the flow meter (refer to Figures 2 and 3).

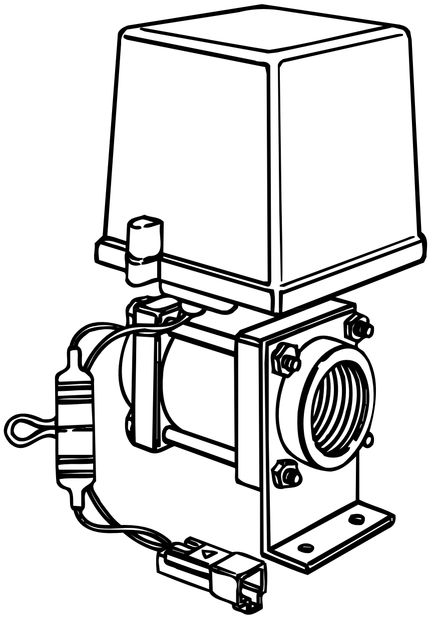

Figure 1: Bypass Plumbing Diagram - Pressure Based System

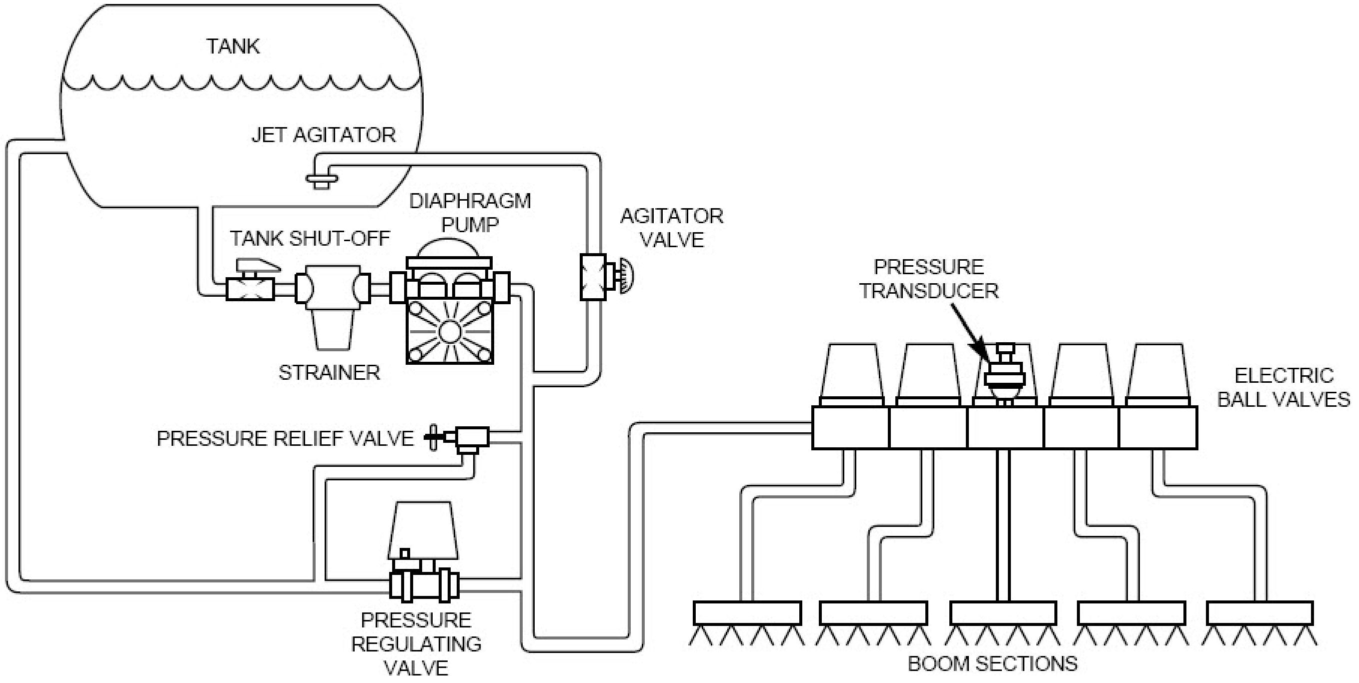
TANK
JET AGITATOR
DIAPHRAGM PUMP
TANK SHUT-OFF
AGITATOR VALVE
STRAINER
PRESSURE TRANSDUCER
ELECTRIC BALL VALVES
PRESSURE RELIEF VALVE
PRESSURE REGULATING VALVE
BOOM SECTIONS

Figure 2: Bypass Plumbing Diagram - Flow Based System

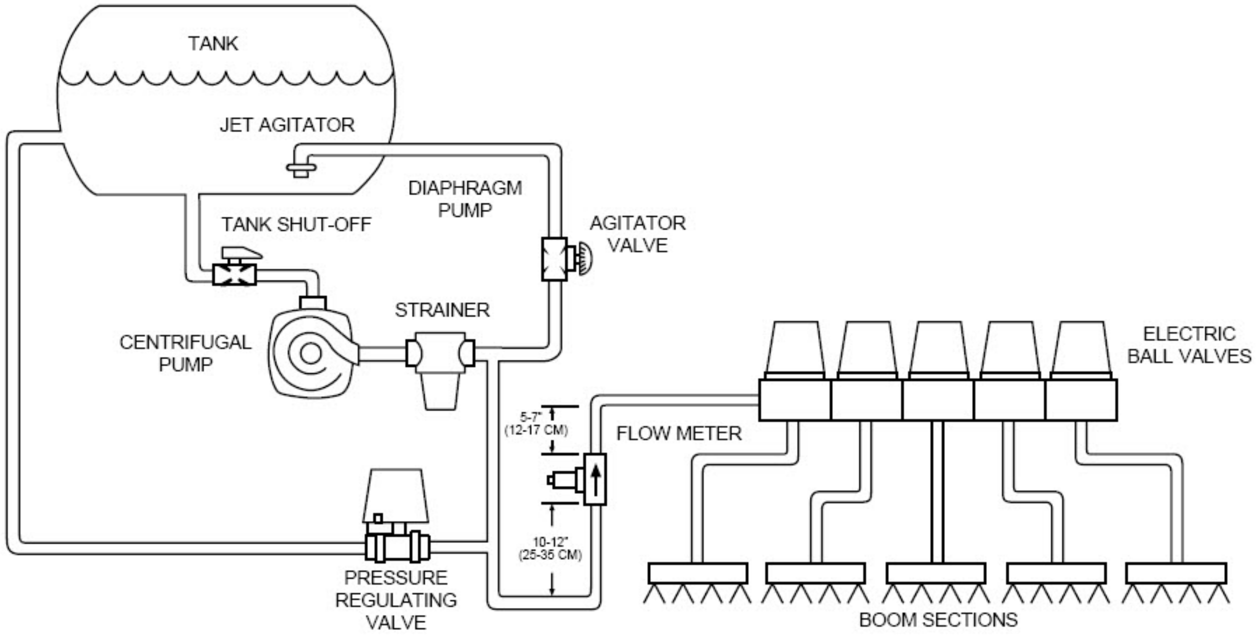
TANK
JET AGITATOR
DIAPHRAGM PUMP
TANK SHUT-OFF
AGITATOR VALVE
STRAINER
CENTRIFUGAL PUMP
ELECTRIC BALL VALVES
5-7" (12-17 CM)
FLOW METER
10-12" (25-35 CM)
PRESSURE REGULATING VALVE
BOOM SECTIONS

Pressure Regulator in Throttling Mode

The pressure regulating valve, as shown in the figures below, can be located in the supply line before the boom control valves. If you choose this location, the 844 will need to be properly programmed to reverse the polarity of the valve. This step can be found in the System Setup instructions on page 14. When in throttling mode, the valve should open when the Plus key ⊞ is pressed, and close when the Minus key ⊟ is pressed. Be sure to check this before plumbing the valve into the system.

Figure 3: Throttling Plumbing Diagram - Flow Based System

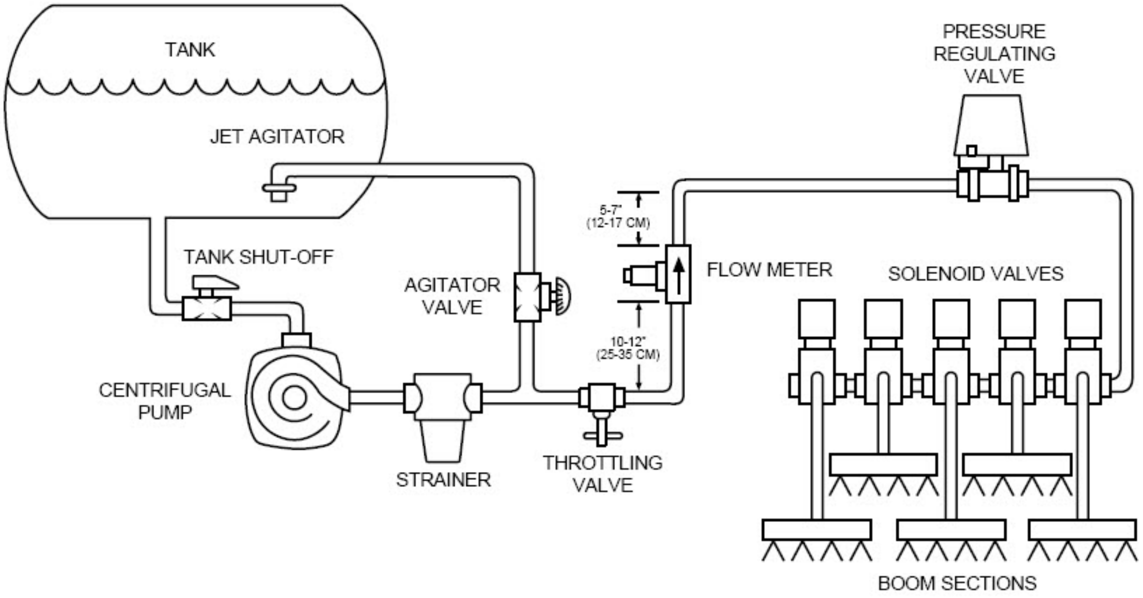
TANK
PRESSURE REGULATING VALVE
JET AGITATOR
5-7" (12-17 CM)
TANK SHUT-OFF
AGITATOR VALVE
FLOW METER
SOLENOID VALVES
10-12" (25-35 CM)
CENTRIFUGAL PUMP
STRAINER
THROTTLING VALVE
BOOM SECTIONS

Figure 4: Throttling Plumbing Diagram - Pressure Based System

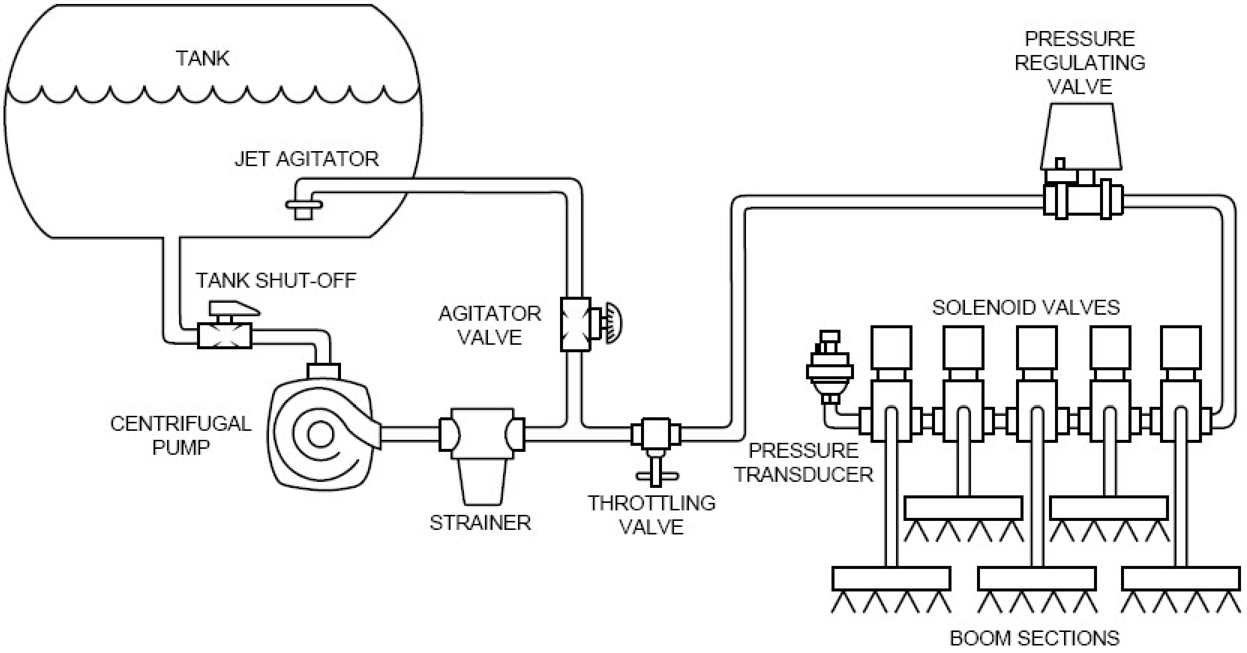

Flow Meter

To ensure accurate readings, the flow meter (if used) must be mounted 10" to 12" (25-35 cm) from other pipe fittings, preferably in a vertical position with the flow going up. It should also be mounted with the direction of flow arrow pointing toward the boom control valves. Refer to Figures 2 and 3.

Be sure the flow meter is plumbed so that all liquid passing through it is routed to the booms and not back to the tank. When using three-way boom control valves, refer to page 13 of this manual for programming guidelines.

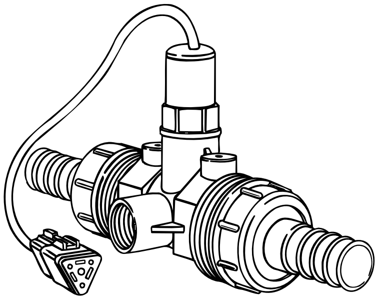

Boom Control Valves

The Boom Control Valves are connected in tandem and centered in front of the boom sections. See the Control Valve Instruction Manual for mounting instructions. If using three-way valves, refer to the instruction manual of the valves you are using for valve calibration instructions.

Pressure Transducer

The pressure transducer (if used) should be installed as close to the spray tips as possible. Normally this is at the boom control valve assembly. Refer to Figures 1 through 3. Mount the unit vertically on a short stand pipe to help protect the sensor.

NOTE: Pressure drop, to some degree, is found in most plumbing systems. Pressure drop is created when there is any kind of restriction in the spray line that reduces flow rate and is quite often produced between the boom control valve assembly and the spray tips. If one of the boom sections on the sprayer is always used, the pressure transducer can be installed on that particular boom section, minimizing any potential pressure drops between the sensor and spray tips. If the pressure drop in your system is greater than 5 psi (0.3 bar), you should consider this as an alternative location for the pressure transducer.

Check all components to make sure they are mounted securely to avoid excessive vibration.

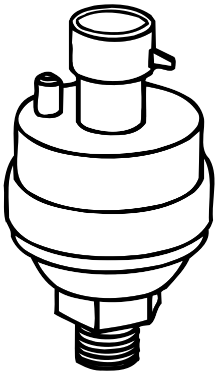

INSTALLING THE SPEED SENSOR ASSEMBLY

Components

Two (2) magnets, Sensor with attached connector cable, and mounting hardware. If you are installing a radar ground speed sensor, follow the instructions supplied with that unit.

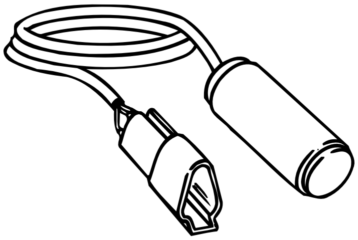

Speed Step 1 - Location

The speed sensor assembly should be installed on a non-driven wheel to avoid potential errors that are likely to occur from a slipping drive wheel. Refer to Figure 5.

Proximity Sensor (optional)

An optional proximity sensor is available to use in cases where space is limited or for drive shaft mounting.

The proximity sensor will work by sensing any metal object. The proximity sensor must be mounted so that the sensor face is within 1/8" to 3/8" (3-10 mm) of the metal object being read.

Figure 5: Wheel Mounting of Speed Sensor

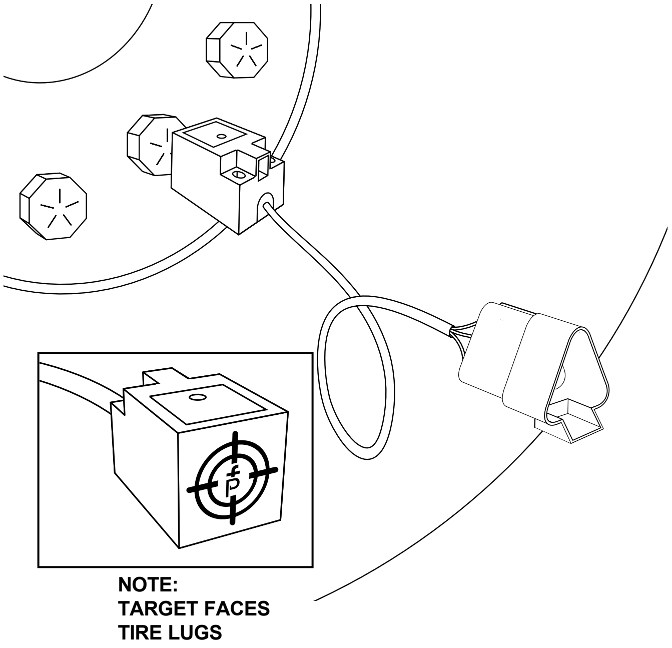

Note: Target faces tire lugs

Figure 6: Wheel Mounting of Magnetic Speed Sensor

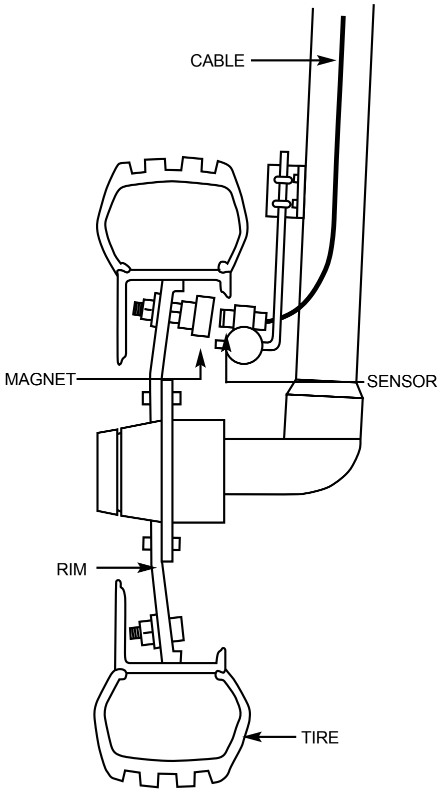

Speed Step 2 - Installing The Wheel Magnets

Check for pre-drilled holes in the wheel rim. If pre-drilled holes are not available, layout a pattern as shown in Figure 7 and drill two 3/8" (10 mm) holes near the outer edge of the rim if possible, and 180° from each other.

Place the magnets into each of the two holes on the inside rim and securely fasten them using the nuts and washers provided.

Figure 7: Magnet Locations

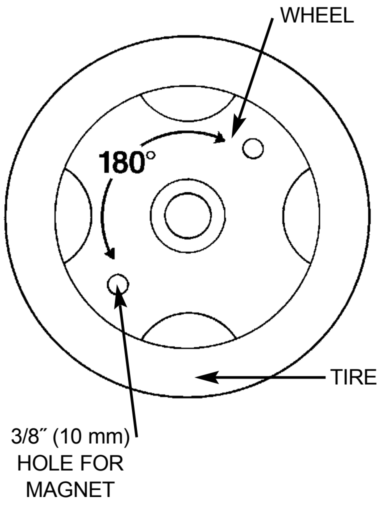

Figure 8: Magnet Assembly

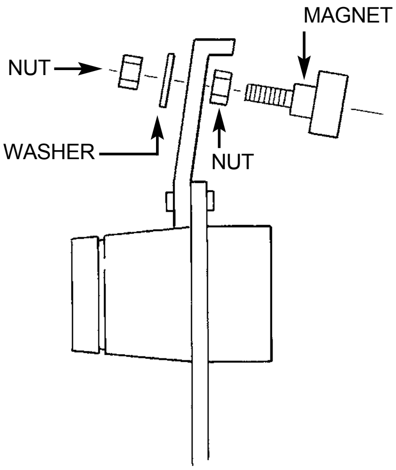

Speed Step 3 - Installing the Magnetic Sensor

The flat, pressed L bracket of the wheel speed sensor kit should be secured to a vertical member near the non-driven wheel. The round, right angle steel bracket is then secured to the flat bracket with the two U-bolts and necessary hardware provided. The round, right angle bracket is then used to secure the magnetic sensor mounting clamp.

The magnetic sensor should be inserted into the mounting clamp and positioned within 1/8" to 3/8" (3-10 mm) of the wheel magnet. Tighten the sensor clamp using the clamp screw per Figure 10.

Your installation will likely vary from the example. It may be necessary to customize the installation to accommodate your specific machine. Keep in mind that the two magnets must be spaced an equal distance around the wheel. The magnetic sensor must be mounted in-line with the magnets and positioned within 1/8" to 3/8" (3-10 mm) from each magnet as they pass the Sensor assembly.

Figure 9: Sensor Mounting

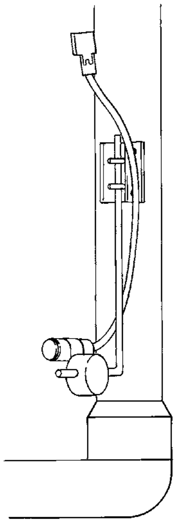

Figure 10: Sensor Assembly

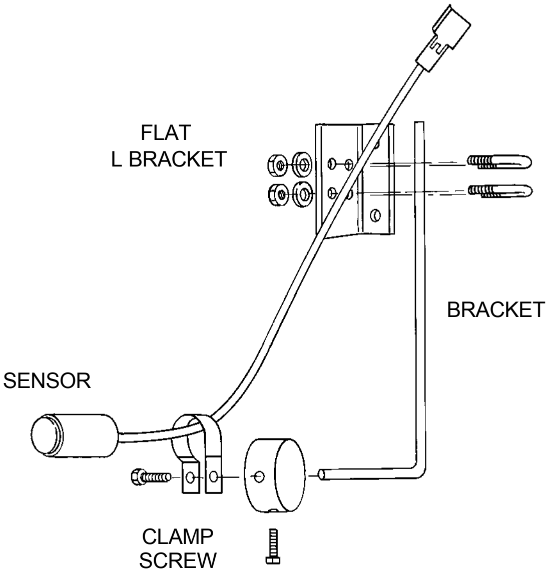

Speed Step 4 - Confirming Speed Sensor Installation

Magnetic Wheel Sensor

After your wheel or proximity sensor is installed and once the 844 console is installed and powered up, you can test the speed sensor installation. Connect the wheel speed or proximity sensor to the sensor cable, and in turn connect the sensor cable to the 844 console. When the connection is made, rotate the wheel on which the magnets are installed. If using a proximity sensor, you will be sensing metal objects and not magnets. Each time a magnet (metal object for proximity sensor) passes the sensor a red LED (orange LED for proximity sensor) on the back of the sensor will light. The LCD display on the console will also indicate a speed as the sensor receives and sends electronic pulses.

Radar

If you are using a radar speed sensor it should be connected to the speed sensor connector on the sensor end cable. An adapter cable will be necessary when using most radars and are available through your TeeJet Technologies dealer. The 844 will automatically sense if the speed sensor is a wheel speed, proximity type or radar type sensor during calibration. The 844 is automatically adapted to most brands of radar speed sensors provided that the appropriate adapter cable is used. If using a radar sensor, the 844 will display rAd during the calibration procedure.

MOUNTING THE TEEJET 844 CONSOLE

Console Step 1 - Location

Determine the best location for the control console in the cab or operator’s compartment. Allow sufficient clearance, approximately 4-5" (10-12 cm) to accommodate for the cable that will be connected to the right side of the console.

Console Step 2 - Mounting

Mount the console to a firm support within the cab area, and secure using the slots provided on the top, back, or bottom of the Console. Although two simple brackets are supplied with the unit, some additional bracketing may be necessary. The slots in the 844 will accept 1/4" (6 mm) bolts.

Figure 11: Brackets Provide Angle Adjustment

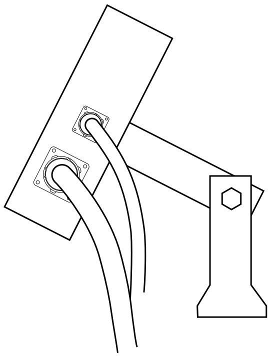

Console Step 3 - Power Connection

Locate the power cable that has a black connector on one end and two battery terminal rings on the other. Extend the battery terminal ring end of this cable from the cab to the battery.

NOTE: *Some tractors use two 6 Volt batteries as a power source. Make sure there are a total of 12 Volts delivered to the controller by connecting to the (+) terminal on one battery and the (-) terminal on the other battery. Reliable operation of the 844 Sprayer Control depends on a clean power supply. Ensure this by connecting the power cables directly to the battery and not to another power source.*

Connect the battery terminal rings to the battery posts, making sure that the positive (red) and negative (black) wires correspond with the polarity of the battery terminals.

NOTE: *The power cable is designed to provide the simple addition of a remote master boom switch in a convenient location (i.e. on the throttle, gear shift, or floor switch). To install a remote boom switch, simply install a switch to the brown wire in the power cable. The switch should be rated to handle the total current used by all boom section valves combined. If installed, the remote master switch will operate in series with the boom switches on the console.*

Connect the battery cable to the power cable lead that extends from the main cable.

Test the installation by pressing the Program key PRO once to turn the 844 console on. If the display shows information, you have wired the power correctly.

NOTE: *The TeeJet 844 Sprayer Control has an automatic power down feature. With the master boom switch in the "off" position, the 844 will automatically shut down after 10 minutes of no inputs. This prevents possible battery drainage. To turn the console "off" with the Master Switch located in the "off" position, press and hold the Minus key ⊟ while pressing the Program key PRO once, and then releasing both keys. The console will shut down providing no other keys are pressed.*

Figure 12: Power Connection

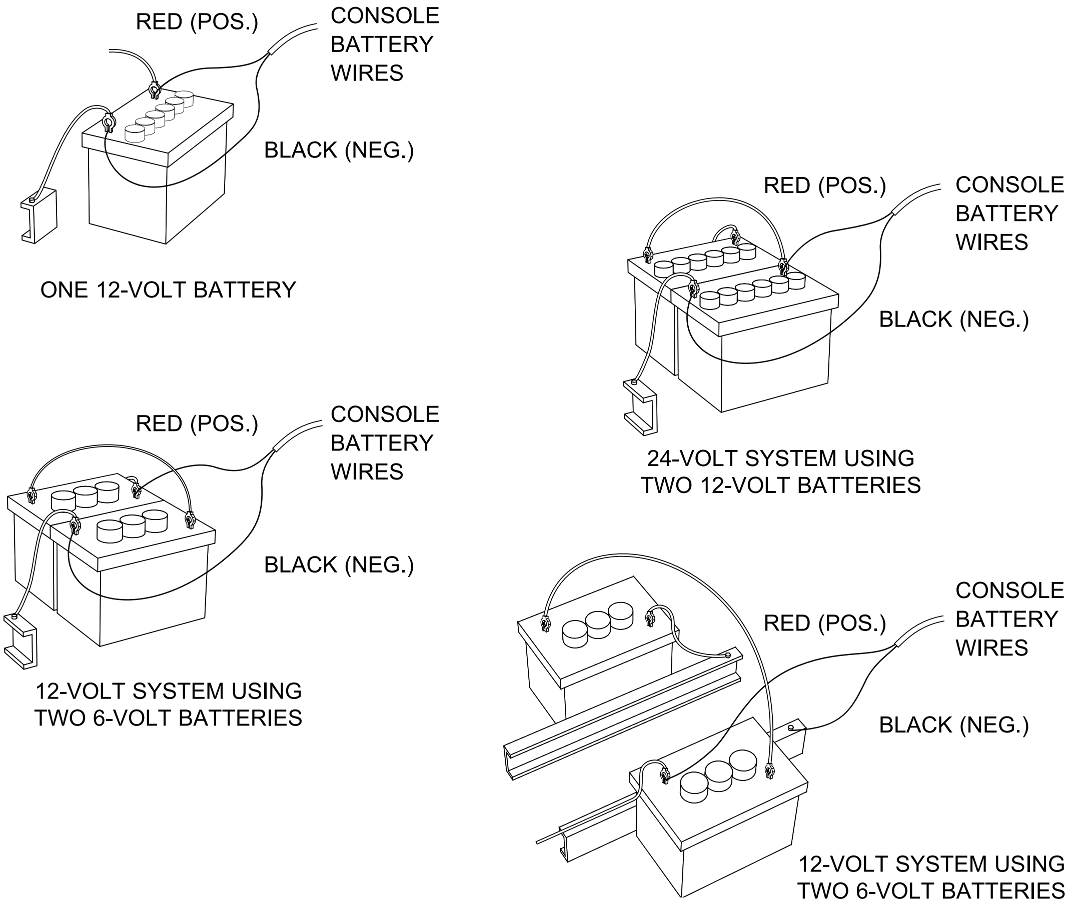
RED (POS.)
CONSOLE BATTERY WIRES
BLACK (NEG.)
ONE 12-VOLT BATTERY
RED (POS.)
CONSOLE BATTERY WIRES
BLACK (NEG.)
24-VOLT SYSTEM USING TWO 12-VOLT BATTERIES
RED (POS.)
CONSOLE BATTERY WIRES
BLACK (NEG.)
12-VOLT SYSTEM USING TWO 6-VOLT BATTERIES
RED (POS.)
CONSOLE BATTERY WIRES
BLACK (NEG.)
12-VOLT SYSTEM USING TWO 6-VOLT BATTERIES

Console Step 4 - Connecting Component Cables

Now that you have the console installed you can begin connecting it to the other components of the 844 system. The standard kit contains a main cable that attaches to the boom control valves, the pressure regulating valve, flow meter and/or pressure sensor, a magnetic wheel speed sensor, and a proximity speed sensor or radar speed sensor. Lay out each of the valve and sensor leads before installing the sprayer components to be sure the cables are long enough in length from the sensor connections to the 844 console connection. If your installation requires longer cables, several extension cables are available. If an exit hole has to be cut in the cab, be sure the edges are deburred and protected to prevent damage to the cables.

Figure 13: Wiring Diagram

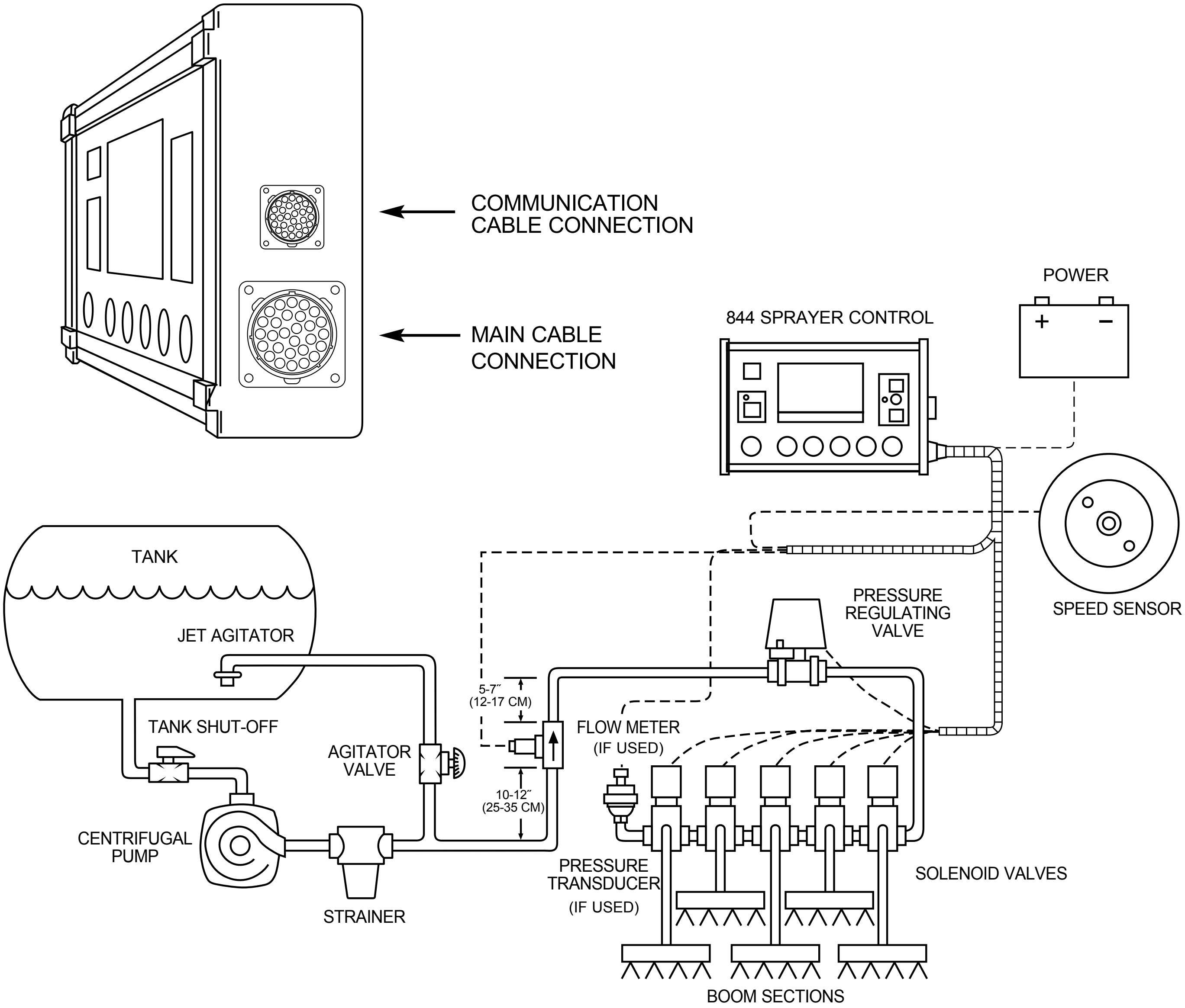
COMMUNICATION CABLE CONNECTION
MAIN CABLE CONNECTION
POWER
+
–
844 SPRAYER CONTROL
SPEED SENSOR
TANK
JET AGITATOR
TANK SHUT-OFF
AGITATOR VALVE
CENTRIFUGAL PUMP
STRAINER
5-7˝ (12-17 CM)
10-12˝ (25-35 CM)
FLOW METER (IF USED)
PRESSURE REGULATING VALVE
PRESSURE TRANSDUCER (IF USED)
SOLENOID VALVES
BOOM SECTIONS

Connect Step 1 - Wiring Layout

Determine the best cable routing to the sprayer control components on the sprayer. This may be along the flow line, main frame of the sprayer, or wherever the cables can be conveniently secured. Avoid any situation where the cables may lay in puddles, or come in contact with extreme heat sources.

WARNING: System Components should be mounted at least 3 ft / 1 m from areas of excessive vibration (i.e. engines) to avoid high frequency interference.

Figure 14: Wiring Layout

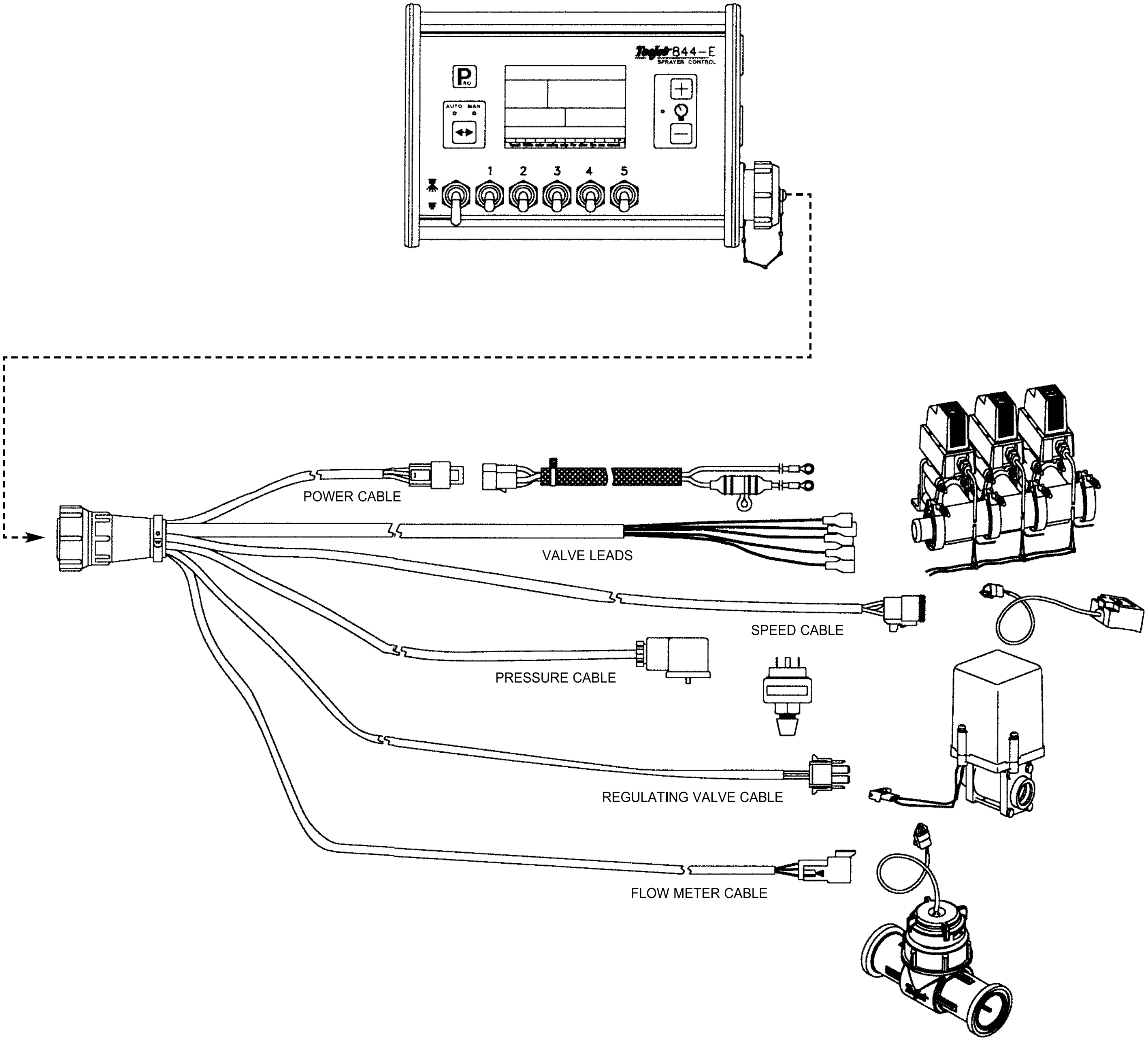
TeeJet 844-E
SPRAYER CONTROL
P
AUTO
MAN
1
2
3
4
5
POWER CABLE
VALVE LEADS
SPEED CABLE
PRESSURE CABLE
REGULATING VALVE CABLE
FLOW METER CABLE

Connect Step 2 - Making The Connection

Now, extend the cable leads to the Flow meter or Pressure Sensor, and Wheel Sensor or Radar Sensor to the furthest component. Select the appropriate lead and connect to this component. Run the cable to the other component, taking care to safely secure the cable along the route. Refer to the diagram on page 10.

Repeat this procedure with the cable leads to the Pressure Regulating Valve and the Boom Control Valves. Refer to the chart below when attaching the boom section wires. T-tap connectors must be attached to the +12vDc and ground wires to connect them to the boom control valves (when using ball valves), which should be evenly distributed across the two.

If both the flow meter and pressure transducer are not used simultaneously, there will be one extra connection on the cable. Simply tie this part of the cable back as it will not be used.

When all connections have been made, connect the large plug into the side of the Control Console.

Figure 15: Console Connector

Console Connector	Pin No.	Wire Color		Signal Name
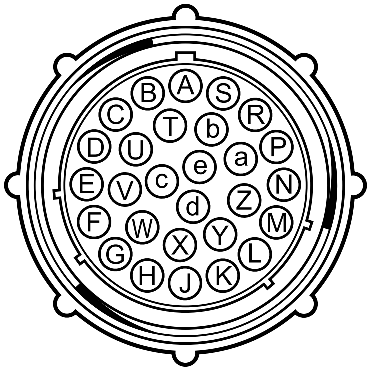 A B S C T b R D U a P e E V c N d Z F W M Y X G L H J K	B	White		Section 1
	C	Brown		Section 2
	D	Green		Section 3
	E	Yellow		Section 4
	F	Gray		Section 5
	R	White		Flow Signal
	S	White		Pressure Signal
	T	White		Speed Signal
	V	Brown		Power Out
	a	White		Regulation Valve (+)
	b	Brown		Regulation Valve (-)
	c	Blue		+12 VDC
	d	Blue	Pink	Ground Free End (Valves)
	e	Red	Black	+12 VDC Free End

Figure 16: Power Connector

Power Connector	Pin No.	Wire Color	Signal Name
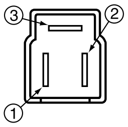	1	Brown	+12 VDC (Computer)
	2	Blue	+12 VDC (Valves)
	3	Yellow/Green	Ground

Figure 17: Speed Sensor Connector

Speed Sensor Connector	Pin No.	Wire Color	Signal Name
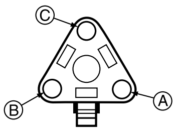	A	Brown	Power Out
	B	White	Speed Signal
	C	Green	Ground

Figure 18: Pressure Sensor Connector

Pressure Sensor Connector	Pin No.	Wire Color	Signal Name
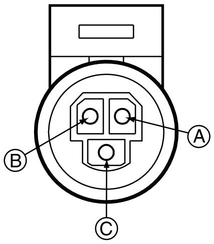	A	White	Power Out
	B	Black	Pressure Signal
	C	N/C	

Figure 19: Flow Sensor Connector

Flow Sensor Connector	Pin No.	Wire Color	Signal Name
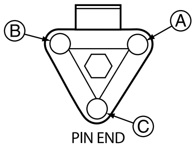	A	Brown	Power Out
	B	White	Flow Signal
	C	Green	Sensor Ground

Figure 20: Regulator Connector

Regulator Connector	Pin No.	Wire Color	Signal Name
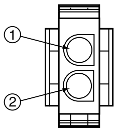	1	White	Regulation Valve (+)
	2	Brown	Regulation Valve (-)

NOTE: The 844 is designed to handle a maximum of 4 amps per boom section.

You are now ready to begin the programming of the TeeJet 844 Sprayer Control.

NOTE: Valves requiring DPDT switches are not compatible with the TeeJet 844 Sprayer Control.

CHAPTER 3 - PROGRAMMING

Important Preliminary Information

Before you begin, we recommend that you review the following Programming Guidelines that control the programming process:

- For your convenience, the programming of the 844 has been divided into two programming categories; System Setup Mode and Application Setup Mode.
- Pressing the Program key PRO once will flash " PRO " in the upper left hand corner of the display window. The word "USEr" will be displayed in the lower right corner indicating you are about to enter the Application Setup Mode. Pressing the Program key PRO a second time will put the Control Console into the Application Setup Mode. If you inadvertently press the Program key PRO once, wait for three (3) seconds and the Control Console will return to its normal operating mode.
- Pressing and holding the Plus key ⊞ and Minus key ⊟ while simultaneously pressing the Program key PRO once will flash " PRO " in the upper left hand corner of the display window. The word "PrO" will be displayed at the right of the display window indicating you are about to enter the System Setup Mode. Pressing the Program key PRO a second time will put the Control Console into the System Setup Mode. A delay of three (3) seconds will return the Control Console to its normal operating mode. The System Setup programming steps will likely only need to be programmed once to customize the controller to your sprayer.
- For either setup mode, if you press and hold the Program key PRO for three (3) seconds, your inputs will be saved and the computer will exit the respective setup mode. This action will not be necessary until the last programming step has been completed.
- To increase the value of a programmable digit, press the Plus key ⊞. To decrease the value, press the Minus ⊟. These keys are located directly to the right of the display. For some programming steps, pressing and holding Plus key ⊞ or Minus key ⊟ will change the programmable value rapidly. Pressing the Plus key ⊞ or Minus key ⊟ once will change the value by one increment. Pressing the Plus key ⊞ and Minus key ⊟ simultaneously in some programming steps will set the value to "0".
- For either setup mode, pressing the Program key PRO will advance you to the next programming step.

Steps to Successful Programming

To begin the programming process:

- Read above for programming tips.
- Be sure the "master" boom switch is "OFF."
- Turn console "ON" by pressing the Program key PRO. When the Control Console is turned on, the software version will be displayed at the top of the display and the serial number will be displayed in the lower half of the display. This information will be needed when calling for service support.
- To turn the console "off", press and hold the ⊟ key while pressing the Program key PRO once, and then releasing both keys. The console display will shut down providing no other keys are depressed.

SYSTEM SETUP MODE

The System Setup Mode contains the programming steps that customize the controller to the sprayer or sprayer components. These include calibration steps and parameters that, once programmed, will likely never change.

To enter the System Setup Mode, press and hold the Plus key ⊞ and Minus key ⊟ simultaneously. While holding the Plus key ⊞ and Minus key ⊟ in, press the Program key 🅿 twice (within three (3) seconds), and release to enter the System Setup Mode. The first programming step should be visible.

Program Units

Setting Your Program Mode (U.S., Turf, NH_3, Imperial, S.I.)

Default = US

The 844 console will display a large "US" in the center of the display. The default value "US" indicates that all default values will be shown in U.S. measurements, unless changed to Turf (trF), Anhydrous (nh3), Imperial Gallons (IMP), or Metric (SI) units. Turf units displays information in Gallons per 1000 ft^2, NH_3 displays units in Pounds of Nitrogen per Acre; Imperial displays units in Imperial Gallons per Acre; and SI displays all units in Metric (l/min, l/ha, km/h, cm).

If you will be using U.S. measurements, no change is necessary. Press the Program key 🅿 to advance to the next programming step.

If you will be using one of the other units listed, press the Plus key ⊞ or Minus key ⊟ to select the units you will be using. Press the Program key 🅿 to accept the value and advance to the next program step.

Reset Defaults

Reset To Default Settings

If the units in the first programming step have been changed, the console will ask if you would like to reset all of the program values to the default settings for the units selected. If you wish to reset to the defaults, use the Plus key ⊞ or Minus key ⊟ to select "YES" and press the Program key 🅿 to activate the resetting process.

If you do not want to reset to the default values, select "no" using the Plus key ⊞ or Minus key ⊟ and the Program key 🅿 to advance to the next step.

NOTE: If you inadvertently changed the Program Units, select "no" in this step. Advance to the Program Units step again using the key and change back to your desired units. Select "no" again at the Reset Defaults step and exit the program mode by pressing and holding the key for three (3) seconds.

Sensor Type

Flow Meter or Pressure Based

Default = FLO

The 844 system can be used with either a flow meter, pressure transducer or both. This step tells the computer which sensor you will be using on your sprayer to control the flow regulation.

The default value is set for a "FLO" based system using a flow meter. If this is what you have installed on your sprayer, then press the Program key 🅿 to advance to the next step.

If, you have installed a pressure transducer instead, use the Plus key ⊞ or Minus key ⊟ to select "PrS" for a pressure based system. Then, press the Program key 🅿 to advance to the next step.

If both sensors have been installed on the sprayer, this step will determine which sensor will be used by the 844 to determine pressure/flow regulation. If "FLO" is selected, the flow meter will be used to control the flow and the pressure transducer will be used only to display the actual pressure. If "PrS" is selected, the pressure transducer will be used to control the flow and display the actual pressure. The flow meter signals will be ignored.

Flow Meter Calibration

Flow Meter Pulses

Default = 650

During the Flow meter Calibration Step, the turbine symbol ❋ will be flashing at the top of the console display.

First, locate the factory flow meter pulse rate tag on the flow meter. If this varies from the default value of the console, use the Plus key ⊞ or Minus key ⊟ to modify the value. Pressing the Plus key ⊞ and Minus key ⊟ simultaneously will clear the value to zero. In some cases, larger flow meters with small calibration numbers will include decimals for greater accuracy. To add a decimal to the 844 calibration number, press the Auto/Manual key.

If you are not using a flow meter, but are using a pressure transducer instead and have selected "PrS" in the previous step, this step will not appear.

NOTE: This flow meter number represents the number of pulses per liter of liquid. The 844 console makes all of the necessary conversions if using units other than metric. The same calibration number will be used for all units.

Pressure Transducer

Maximum rating (P Hi)

Default = 150 (PSI in US, trF and IMP Modes)

Default = 10.0 (bar in SI Mode)

This step is used to set the maximum rating of the pressure transducer in your system. This number can be found stamped on the pressure transducer itself. If your transducer has a maximum rating of 145 psi (10 bar in SI mode) and that number is shown in the display, then advance to the next step by pressing the Program key Ⓟ. If, however, the maximum rating is 363 psi (25 bar in SI mode), use the Plus key ⊞ and Minus key ⊟ to change the value. Press the Program key Ⓟ to advance to the next step.

NOTE: If you are not using a pressure transducer but are using a flow meter instead, skip this step by pressing , leaving the default value programmed.

Low Pressure Calibration (P rEF)

Default = 4.0

This step is used to calibrate the “0” pressure setting of the pressure transducer installed in your system. The pressure transducer used with the 844 is a current type transducer and uses a 4-20 mA reading. 4.0 mA represents 0 pressure.

This step uses an auto-calibration feature to calibrate the transducer. Make sure that the sprayer pump is off and there is absolutely no pressure in the system. Press and release the Plus key ⊞ and Minus key ⊟ simultaneously to activate the auto calibration feature. You will see the message “nES” in the lower left of the display and the lower right of the display count the numbers “0” through “9”. When the display finishes counting, a number close to 4.0 should be displayed. The low pressure value of the transducer is now calibrated.

Press the Program key Ⓟ to advance to the next step.

NOTE: If you have selected a “FLO” based system, skip this step by pressing the Program key Ⓟ and leave this value at the default of 4.0.

Nozzle Spacing

Default = 20 (inches in US, trF, and InP Modes)

Default = 50 (centimeters in SI Mode)

Default = 30 (inches in nh3 Mode)

While in the Nozzle Spacing step, the nozzle spacing symbol ↔ will be flashing at the top of the console display. Nozzle spacing should be recorded in inches (cm in SI mode).

If the default value is correct, press the Program key Ⓟ to accept the value. If the nozzle spacing is different than that shown as a default, then add or reduce this number by using the Plus key ⊞ or Minus key ⊟ keys to record the new value. Pressing the Plus key ⊞ and Minus key ⊟ simultaneously will clear the value to zero.

When the correct value has been entered, press the Program key Ⓟ to accept the value and advance to the next step.

When broadcast or broad acre spraying, enter the nozzle spacing in the display.

If banding, enter the band width as your spacing. If directed spraying, enter the row spacing divided by the number of nozzles per row as your spacing.

NOTE: All Application rate readings (US GPA, G/1000 ft^2, #N/acre, Imp. GPA, and l/ha) and area readings are expressed in treated acres (hectares).

Tips Per Boom Section

Number of Spray Tips Per Boom Section

Default = 6 (tips per section in US, trF, IMP and SI modes)

Default = 12 (tips per section 1, 0 for the others in nh3 mode)

While in the Tips Per Boom Section step, the #tips symbol # will be flashing at the top of the console display. The console will also display “SEC 1” at the left and a number (6) at the right of the display. The “SEC 1” refers to boom section #1 on your console. The number at the right is to be adjusted to match the number of tips you have on boom switch 1.

The default value of “6” will appear for all booms sections. The next five programming steps are Number of Spray Tips Per Boom Section steps. These steps correspond with the five boom switches on the lower portion of the console. The section you are programming can be identified by looking at the SEC # at the left of the display.

You must program the correct number of spray tips for each boom section on your sprayer. Use the Plus key ⊞ or Minus key ⊟ to produce the correct value. Pressing the Plus key ⊞ and Minus key ⊟ simultaneously will clear the value to zero.

Advance to the next step by pressing the Program key Ⓟ. This must be done for all Number of Spray Tips Per Boom Section steps.

Any individual boom switches not being used must be programmed to a “0” value. When you have programmed and validated the last Number of Spray Tips Per Boom Section step, advance to the next program step by pressing the Program key Ⓟ.

User Program Tip

User Programmable Tip

Default = 0.00

While in the User Programmable Tip step, the tip indicator arrow ▼ will be flashing above the **P** tab at the bottom of the display.

In some cases you may find that nozzles other than those pre-programmed for the 844 Sprayer Control will need to be used. If one of the eleven pre-programmed tips do not meet your needs, this programming step allows the user to manually program a tip.

Use the Plus key ⊞ or Minus key ⊟ to adjust flow rate in US Gallons Per Minute (Liters Per Minute) {Imperial Gallons Per Minute} at 40 psi (2 bar). Pressing the Plus key ⊞ and Minus key ⊟ simultaneously will clear the value to zero. To accept the value, press the Program key P to advance to the next programming step.

The flow rate information for the tip is only used to calculate the pressure reading for flow based controls. With non-linear tips, the calculation would be incorrect. Therefore we recommend a "0.00" setting for non-linear tips so that the pressure will read "0" at all times, instead of an inaccurate pressure. Non linear tips should not be used with pressure based controls. Pressure based controls use the tip flow rate information to adjust the pressure to achieve the right application rate based on the size of the tips. With non linear tips, there is no way for the controller to accurately calculate what the pressure should be at various speeds.

WARNING: If the user is using tips other than the TeeJet®, VisiFlo® brand, the corresponding colors may not match. In this case, the user should determine the flow rate of the tip being used at 40 psi (2 bar), and enter this flow rate as the programmable tip.

NOTE: The flow rate will be automatically displayed at 40 psi (2 bar). This pressure must be used for determining your tip's flow rate. Actual operation pressure is not important.

When the correct nozzle flow rate has been entered, advance to the next programming step by pressing the Program key P.

Pressure Regulation

Pressure Regulation Mode

Default = bYP (By-pass for US, trF, IMP, and SI Modes)

Default = thr (Throttling for nh3 Mode)

While in the Pressure Regulating Mode step, the regulator symbol will be flashing at the top of the console display.

This step tells the 844 where the regulating valve has been plumbed. Once set correctly, this value should not change unless the regulating valve is physically moved to a new point in the plumbing. For more information on plumbing refer to pages 2 and 3 of this manual.

The default value "bYP" indicates that the pressure regulating valve is plumbed in the bypass line. In most situations, especially total flows below 4 US GPM (15 l/min) {3.3 Imperial GPM}, this is the preferred installation position. If the default is correct, press the Program key P to accept the value and advance to the next step.

NOTE: When programmed in the bypass mode, with the controller in "MAN" mode, the pressure regulating valve should close when the Plus key ⊞ is pressed, and open when the Minus key ⊟ is pressed.

The pressure regulating valve can be located in the supply line between the flow meter and the boom control valves. If you will be locating the pressure regulating valve in this position, use the Plus key ⊞ or Minus key ⊟ to change the value to tHr (Throttling Mode). By doing this, you have reversed the polarity that the console uses to control the regulating valve.

NOTE: When programmed in the throttling mode with the controller in "MAN" mode, the valve should open when the Plus key ⊞ is pressed and close when the Minus key ⊟ is pressed.

Press the Program key P to advance to the next step.

Regulation Adjustment Speed

Default = 9.5 (bYP Mode)

While in this step, the regulator symbol will be flashing at the top of the console display. This step allows you to regulate the speed of the pressure regulating valve to accommodate different application needs.

Operating conditions may necessitate a higher or lower response speed for the regulating valve. To change the response time number, simply use the Plus key ⊞ and Minus key ⊟ to increase or decrease the number. Any number between 0.0 and 9.9 can be selected. The first digit sets the speed for the coarse adjustment in relation to a large percentage outside of the target application rate. The second digit sets the speed for the fine tune adjustment in relation to a small percentage close to the target application rate.

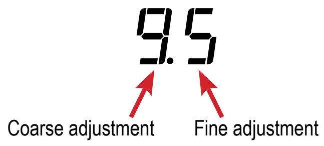

If your system is plumbed in a bypass mode, the valve speed number of 9.5 works very well in most applications.

If your system is plumbed in a throttling mode, start with a valve speed number of 3 and adjust the number according to your application requirements. Low flow situations will require a slower response time. Adjusting agitation volumes to accommodate the regulating valve to work in a more fully open position allows for a faster response time, with little to no searching.

To accept this value and advance to the next step, press the Program key P.

NOTE: This speed value can be adjusted to optimize system performance. If you notice that the valve seems to "search" for the programmed application rate by cycling the pressure up and down continuously, reduce the number until the "searching" is minimized or eliminated. Conversely, a higher number will increase the valve response speed and speed up the rate of adjustment.

Control Valve Type

Boom Control Valve Type: 2-Way/3-Way

Default = 2 Way

While in this step, the regulator symbol will be flashing at the top of the display. The programmable information (2 Way or 3 Way) will be displayed at the left in the console display.

This programming step is used to distinguish the type of on-off boom control valves you have on your system. There are two types of valves that can be used, 2-way control valves or 3-way control valves.

A 2-way control valve is simply an on/off valve. Flow is either directed to the boom section(s) or it is blocked or diverted away from the booms. A 3-way control valve is know as a by-pass valve. Flow continuously passes through this valve. When the valve is activated (on), flow is directed to the boom section(s). When the valve is not activated (off), flow is directed through a bypass port, back to the supply tank.

If you are using the 3-way type of boom control valves in your system, change the value using the Plus key ⊞ or Minus key ⊟.
Press the Program key P to accept the value and advance to the next programming step.

If the default value is correct, press the Program key P to accept the value and advance to the next programming step.

NOTE: If using 3-way, bypass boom control valves, refer to the instruction manual of the valve you are using for proper calibration instructions.

Calibrate Speed

Speed Sensor Calibration

Default = 250

NOTE: During Speed Calibration, the 844 will automatically sense whether a Wheel Speed or Radar Speed Sensor is being used.

While in the Speed Calibration Programming Step, the calibrate speed symbol 🚜 will be flashing at the top of the display. The programmable value (250) will be displayed in the lower right corner of the display.

Proximity/Magnetic Pulses

The speed sensor needs to be calibrated in order to provide the proper speed and area readings. The value for this step is the number of pulses generated by the speed sensor in 300 ft / 100 m. This value can be determined by automatic calibration while driving exactly 300 ft /100 m, or by entering the number manually.

Automatic Calibration

To automatically calibrate the speed sensor, mark off a distance of exactly 300 ft / 100 m. While still in the speed calibration program step, position your sprayer at the beginning of your 300 ft / 100 m course and press the Plus key ⊞ and Minus key ⊟ simultaneously to clear the contents of the display and to activate the auto calibration mode. When the auto calibration mode has been activated, CAL will be displayed at the lower right of the display. Next, press the Plus key ⊞ once to begin the calibration process. Now drive the course and the 844 will count the pulses as the sprayer moves. The speed at which you drive over the course is not important. Stop the sprayer at exactly 300 ft (100 m in SI mode) and press the Program key 🅿 to validate the number in the display.

The speed sensor is now properly calibrated.

NOTE: Once the auto calibration mode has been activated, no other functions of the 844 are possible until the console receives speed impulses for calibration. To deactivate the auto calibration mode, press the key twice.

During the automatic calibration step, the 844 automatically senses if a radar ground speed sensor is installed. If you prefer to enter the speed value manually, refer to the following instructions.

Manual Calculation:

To manually calculate the proper value for Wheel Speed Sensor pulses, you need to know the circumference of the wheel to which the sensor is mounted. It can be measured by marking the tire and measuring the distance covered as that mark makes one full revolution.

Then use the following formula:

$$\frac{3600 \times \{\#\text{ magnets on wheel (usually 2)}\}}{\text{Wheel Circumference in inches}} \quad \text{i.e.} \quad \frac{3600 \times 2}{30} = 240$$

$$\frac{10{,}000 \times \{\#\text{ magnets on wheel (usually 2)}\}}{\text{Wheel Circumference in cm}} \quad \text{i.e.} \quad \frac{10{,}000 \times 2}{80} = 250$$

The result can be entered as an alternative to using the automatic calibration method. Use the Plus key ⊞ or Minus key ⊟ to adjust the value. Press the Program key 🅿 to validate the value and advance to the next programming step.

Radar Speed Pulses

Automatic Calibration:

The automatic calibration of a Radar speed sensor is similar to the automatic calibration of a wheel speed sensor. Refer to the directions above. When the console has determined that a Radar Speed Sensor is being used, rAd will be displayed in the lower left of the console display.

Manual Calculation:

To manually enter the radar calibration value, first press the Auto/Manual key to put the control console into radar mode. When the Control Console is in the manual radar calibration mode, rAd will be displayed in the lower left of the console display. Now use the Plus key ⊞ or Minus key ⊟ to adjust the value. When the correct value has been entered, press the Program key 🅿 to validate this value.

Distance Counter

Default = 0

This step is a feature, not a calibration step. No specific value needs to be entered here for the controller to operate correctly.

This feature will measure distance in feet (meters). This can be used to measure fields, fence lines or to confirm Automatic Speed Calibration. To activate the counter the Master Boom Switch must be on. To avoid actually spraying during this task, toggle the individual boom sections off. Anytime that the Master Boom is on during this step the console will measure distance. If the Master switch is toggled off, the console will stop counting distance.

To clear an existing distance, press the Plus key ⊞ and Minus key ⊟ simultaneously.

NOTE: *To confirm Automatic Speed Calibration, first complete the calibration procedure. Advance to Distance Counter step. Drive across the same 300 ft / 100 m course turning the Master Switch ON at the start point and OFF at the finish point. Distance measured should be 300 ft / 100 m +/- 6 ft / 2 m.*

Simulated Ground Speed

Default = 6.0

While in the Simulated Ground Speed step, the calibrate speed symbol will be flashing at the top of the display. The default value of 6.0 will be displayed in the middle of the display.

The simulated ground speed allows you to check out the functions and operations of the console and of the sprayer, spraying water, without actually moving the sprayer. This can and should be done prior to any spraying activity.

NOTE: *If you are using a Radar Speed Sensor, disconnect the Radar connection from the main console. Because of the sensitivity of this unit, any movement can disable simulated speed.*

To set the simulated speed, use the Plus key ⊞ and Minus key ⊟ to adjust the value. When the value is set, press the Program key P to advance to the next step. The simulated speed will be activated after you exit the system setup mode.

NOTE: *Once the sprayer begins moving and the 844 receives actual speed pulses, the simulated speed feature is deactivated.*

Program Specific Gravity

Liquid Specific Gravity (Density)

Default = 1.00

While in the Liquid Specific Gravity (Density) Programming Step, the density symbol **D**, will be flashing at the top of the console display.

The default value of "1.00" corresponds with the specific gravity of water and is correct for most pesticide applications. Occasionally some spray solutions, such as fertilizer, have different densities. If you are using such a material, a new value should replace the default value. The chart to the left can help you determine the specific gravity of other solutions.

To change the default value to your new value, use the Plus key ⊞ or Minus key ⊟ to change the value in the display. Pressing the Plus key ⊞ and Minus key ⊟ simultaneously will clear the value to zero. To accept the value and advance to the next programming step, press the Program key P. If the solution that you are using can not be found on the chart to the right.

Weight of Solution Per Gallon	Specific Gravity
7.0 lb	0.84
8.0 lb	0.96
8.34 lb - water	1.00
10.0 lb	1.20
10.65 lb - 28%N	1.28
10.85 lb - 30%N	1.30
11.0 lb	1.32
12.0 lb	1.44
14.0 lb	1.68

NOTE: *Water weighs 8.34 lb/gal or 1 Kg/L*

The Specific Gravity can be calculated as follows:

$$\text{Specific Gravity} = \frac{\text{Weight of Solution}}{\text{Weight of Water}}$$

NOTE: *To activate this specific gravity number, while in the Application Setup Mode, press the Auto/Manual key so the "D" is displayed at the top of the screen. When the "D" is displayed, all calculations performed will use the specific gravity programmed in this step. To remove the "D" press the Auto/Manual key. When the "D" is not displayed all calculations performed will use the specific gravity of water (1.00) regardless of whether another density is programmed into this step or not.*

Communications

Default = no COM (no communications)

This step lets you select what type of communication you will be using. The choices available are the default of "no COM" (no communications), "Prt" (Printing Capability), "GPS" (Global Positioning Communication Capability), or "LOG" (Downloading to a PC on the go capability).

Use the Plus key ⊞ or Minus key ⊟ to select the type of communication you will be using. After selecting the communication you will be using, press the Program key 🄿 to advance to the next step.

NOTE: *If a communications feature is selected, you must exit the setup mode, power down the console (⊟+ 🄿) then restart the console (🄿). This activates the selected communication feature.*

WARNING: *The 844 must be powered on before connecting to a communication device (i.e. printer, computer, GPS). The 844 will not completely power on if it is first connected to a communication device.*

Minimum Pressure

Minimum Regulating Pressure Setting

Default = 10 PSI (0.7 bar)

This programming step allows you to set the minimum pressure that the sprayer control will regulate to. Sometimes when the sprayer speed slows down, the control system will regulate the pressure so low that it falls below the manufacturer's recommended pressure for the spray tip or reduces system flow to the point where the flow meter will stall.

To avoid these situations, the TeeJet 844 can be programmed to not regulate below the pressure set in this step. If this step is set for the default of 10 psi (0.7 bar), the pressure will not go below 10 psi (0.7 bar) while spraying in automatic mode.

NOTE: *Not all 844 models contain this programming step. If this step is not displayed, the 844 has an automatic low pressure setting of 10 psi (i.e. the system will not regulate below 10 psi (0.7 bar).*

When you have completed the Minimum Regulating Pressure Setting Step, you have completed the System Setup Mode of the TeeJet 844 Sprayer Control.

NOW, PRESS AND HOLD THE PROGRAM KEY 🄿 FOR THREE (3) SECONDS, AND THE ENTIRE PROGRAM SYSTEM WILL BE STORED IN THE COMPUTER'S MEMORY.

NOTE: *For your protection, the 844 console will not automatically power down while in the System Setup Mode. You must exit properly, as described above, to enable the console auto power down feature.*

NOTE: *Cutting the power to the controller while in the System Setup Mode will not save any changes into the computer's memory.*

APPLICATION SETUP MODE

The Application Setup Mode contains the programming steps that are most frequently changed (target application rate, and nozzles used). Spraying Systems Co. has added this separate setup mode to speed the programming process when minor changes are made in the spraying operation (i.e. changing fields, switching nozzles, changing crops, etc.). The operator can avoid toggling through all of the programming steps unnecessarily.

To enter the Application Setup Mode, press the Program key 🄿 twice. Pressing the key once inadvertently will cause the display to flash " 🄿 " in the upper left and "USEr" at the lower right of the display for three (3) seconds before the 844 will return to normal operating mode. The " 🄿 " / "USEr" indicates that the console is about to enter the Application Setup Mode. Pressing the Program key 🄿 a second time within three (3) seconds puts the Control Console into the Application Setup Mode.

Target Application Rate

US Default = 20.0 US GPA

trF Default = 2.00 Gal/1000 ft^2

IMP Default = 20.0 Imperial GPA

nh3 Default = 200 Pounds of Nitrogen/Acre

SI Default = 200 l/ha

While in the Target Application Rate step, the application rate, pressure, speed, and flow rate in US GPM (l/min) {Imperial GPM}, will be displayed. The application rate units (GPA, G/1000 ft^2 or l/ha) will be flashing indicating that the corresponding value can be adjusted or programmed.

Your target application rate should be entered in this step. Use the Plus key ⊞ or Minus key ⊟ to adjust the value. Pressing the Plus key ⊞ and Minus key ⊟ simultaneously will clear the value to zero. When the desired application rate has been entered, press the Program key 🄿 to accept the value and advance to the next step.

NOTE: *If you are using NH_3 units, only the Target Application Rate will appear in this step.*

Nozzle Selection

Default = Red or 0.4 US GPM (1.29 l/min) {0.33 Imperial GPM}

While in the nozzle selection step, the display will remain the same as in the Target Application Rate step except the indicator arrow ▼ will be flashing at the bottom of the display just above a color coded strip.

NOTE: The tabbed color strip along the bottom of the display represents color coding for TeeJet® VisiFlo® spray tips. If you are using tips made by another manufacturer, you should use the programmable tip capacity as explained in the System Setup section on page 14.

Select the representative color to match the spray tips being used to apply the desired application rate. Use the Plus key ⊞ or Minus key ⊟ to toggle the indicator arrow ▼ through the tabbed color strip at the bottom of the display panel. The corresponding flow rate for each color will be displayed in US Gallons Per Minute (Liters Per Minute) {Imperial Gallons Per Minute} at 40 psi (2 bar) at the lower right of the display. If the programmable tip is to be used, toggle the indicator arrow ▼ symbol to the “P” tab. Flow rate will always be displayed in US Gallons Per Minute (Liters Per Minute) {Imperial Gallons Per Minute} at 40 psi (2 bar) regardless of any changes to other display parameters.

The table at the bottom indicates flow rates in US Gallons Per Minute (Liters per Minute) {Imperial Gallons Per Minute} at 40 psi (2 bar) for the TeeJet® VisiFlo® color coded spray tips represented in the 844 Spray Control.

WARNING: Color coding of spray tips is not uniform from manufacturer to manufacturer. Flow rates for all nozzles should be checked prior to use. Tips that are worn should be replaced to ensure an accurate application rate.

Required Speed to Achieve the Application Rate

Based on the tip programmed and nozzle spacing (programmed in the System Setup Mode), the 844 console will calculate the required speed to achieve the application rate that was entered in the last programming step. The speed will be displayed in the lower left corner of the display window. Keep in mind that this speed is based on a spraying pressure of 40 psi (2 bar). More calculations can be performed in the next programming step.

When the correct flow rate for the spray tips being used has been entered, press the Program key 🅿 to accept the value and advance to the next step.

TeeJet® VisiFlo® Tip Color	Flow Rate in US GPM at 40 PSI	Flow Rate in l/min at 2 bar	Flow Rate in Imperial GPM at 40 PSI
Orange	0.10	0.32	0.08
Green	0.15	0.48	0.12
Yellow	0.20	0.64	0.17
Blue	0.30	0.97	0.25
Red	0.40	1.29	0.33
Brown	0.50	1.61	0.42
Gray	0.60	1.93	0.50
White	0.80	2.58	0.67
Light Blue	1.00	3.22	0.83
Light Green	1.50	4.83	1.25
Black	2.00	6.45	1.67

Calculation Troubleshooting

This Programming Step is a diagnostic tool only

This programming step has no effect on the operation of the TeeJet 844 Sprayer Control. It allows the user to adjust the indicated pressure to see what effects it would have on the operating speed; or the user can adjust the speed to see what pressure would need to be used to maintain the target application rate. This step should help determine if the correct nozzle size was chosen for the application.

While in the calculation step, either the pressure "PSI" (bar) or speed "MPH" (km/h) units will be flashing.

Adjust Speed:

While in the Calculation Step, the user is able to view the nozzle flow rate, pressure, speed and application rate simultaneously. When first entering this step, the speed "MPH" (km/h) units will be flashing, indicating that this digit can be changed. By pressing the Plus key ⊞ or Minus key ⊟, the programmer can change the indicated speed to a desirable speed or typical operating speed.

The 844 will immediately calculate what the pressure would need to be to maintain the target application rate at this speed. If the pressure is too high, you will need larger spray tips or will have to slow down. If the pressure is too low, you will need smaller spray tips or will have to speed up.

Adjust Pressure:

If you wish to adjust the pressure, press the Program key P once so that the pressure "PSI" (Bar) units begin to flash. Use the Plus key ⊞ or Minus key ⊟ to adjust the indicated pressure to a desired or recommended pressure. The 844 will immediately determine what the operating speed would need to be to achieve the target application rate at this pressure. If the speed indicated is too high, a smaller nozzle is needed. If the speed indicated is too low, a larger nozzle is needed.

Liquid Density:

All calculations performed in the normal Calculation Step are based on spraying water. To convert these calculations to the Liquid Density programmed in the Liquid Specific Gravity (Density) Step in the System Setup Mode (page 14), press the Auto/Manual key. When calculations are using the programmed Specific Gravity (Density), the D symbol will be displayed at the top of the display window. To go back to the calculations based on spraying water, press the Auto/Manual key.

NOTE: If you are going to be spraying with a different density of liquid other than water and you have programmed that specific gravity (density) into the Specific Gravity (Density) Step in the System Setup Mode, you must select the density symbol **D** *at the top of the display in order for all of the calculations to be performed in the regular spraying mode. If when in the regular spraying mode, you do not see the density symbol* **D** *at the top of the display, this means that you have not selected a different specific gravity of liquid and that all calculations will be performed with water (1.00).To spray with a different density liquid, the specific gravity must first be programmed into the System Setup Mode in the Specific Gravity (density) step on page 19. Once a number has been programmed into that step, you must select the density symbol* **D** *in the Application Setup Mode by pressing the Auto/Manual key.*

NOTE: The tip flow rate, in the lower right corner of the display, will always display the flow rate in US Gallons Per Minute (Liters Per Minute) {Imperial Gallons Per Minute} at 40 psi (2 bar), regardless of changes to the indicated pressure.

After performing the calculations, you can advance to the beginning of the Application Setup sequence to make any changes by pressing the Program key P once. If no changes are necessary, you have completed the Application Setup Mode of the TeeJet 844 Sprayer Control.

NOW, PRESS AND HOLD THE PROGRAM KEY P FOR THREE (3) SECONDS, AND THE ENTIRE APPLICATION SETUP MODE WILL BE STORED IN THE COMPUTER'S MEMORY.

NOTE: For your protection, the 844 console will not automatically power down while in the Application Setup Mode. You must exit properly as described above to enable the console auto power down feature.

NOTE: Cutting the power to the controller while in the Application Setup Mode will not save any changes made into the computer's memory.

CHAPTER 4 - OPERATING INSTRUCTIONS

Sprayer Checkout

Before spraying, check all connections related to the Sprayer Control assembly. Particular attention should be given to the speed sensor to be sure the sensor and magnets are in line, and properly secured.

WARNING: Whenever you are working around a sprayer or farm chemicals, be sure to wear protective clothing and eye wear.

Partially fill the sprayer tank with water to flush the system and to make a visual check of the spray tips to be sure all tips are delivering a good spray pattern.

Follow these steps, in sequence, being sure the Master Boom Switch is in its “off” position:

1. Be sure the tank shut-off valve is open.
2. Start the engine, engage pump, and set the rpm to that which will be used when spraying.
3. Switch the computer on by pressing the Program key PRO on the display panel.
4. Ensure that the spray tips being used match those pre programmed.
5. Turn “on” the toggle switches for each of the spray booms on your sprayer.
6. Press the Auto/Manual key so that the red LED light indicates “MAN” mode.
7. Now, toggle the Master boom switch to “on.”
8. Adjust the pressure with the Plus key ⊞ and/or Minus key ⊟.
9. While spraying, adjust the pressure with the ⊟ key to the system’s minimum point.
10. Now press the Plus key ⊞ for three (3) seconds. This will move the regulating valve to its middle position.
11. Manually adjust the system pressure using a throttle valve in the supply line or a manual shutoff valve on a bypass line. Adjust the system pressure so that it is close to what your operating pressure will be for your application.
12. This ensures a maximum range of automatic adjustment while spraying in Auto mode.

At this point, the sprayer will be activated and spray tip performance can be visually checked. The pressure adjust keys can be used to raise or lower your spraying pressure. To stop spraying, toggle the Master boom switch to “off”.

The above steps provide a quick way to check out your sprayer and computerized control system.

NOTE: It is recommended that you calibrate your sprayer to prepare the unit for operation, and to diagnose spray tip wear. Worn tips can contribute to costly chemical waste, and inaccurate spraying regardless of your use of a sprayer control. Calibration is important and necessary to obtain the benefits associated with a computerized sprayer control.

The Spraying Operation

You have filled the sprayer tank and have thoroughly mixed the chemical(s).Your application rate has been determined as well as the spray tip you will be using, with the sprayer data programmed into the computer.

1. Switch the computer on by pressing the Program key PRO on the display panel.
2. Toggle the boom switches to their “on” position, for each of the booms on your sprayer.
3. Take note of the “numbered” booms on each side of the sprayer, so that the appropriate boom can be toggled “off” as necessary.
4. The Auto/Manual key should be switched to “AUTO.”
5. In the Auto mode, when the master boom switch is “off”, the target application rate as well as the target symbol ◎ will be displayed in the console display. When the master boom switch is “on”, the actual rate will be displayed and the target symbol ◎ will no longer appear.
6. On flow based models, the lower right corner of the display will alternate displays of the application area (“Ac” for acres or “Ha” for hectares) and the total volume applied. The display will alternate approximately every three seconds.
7. While spraying with the master boom switch “on”, the display window will always display the actual application rate, vehicle speed, pressure and application area covered/total volume applied simultaneously.

As you enter the field to the point where you will begin spraying, turn the MASTER boom switch to “on” position. This will activate the spraying operation. Maintain your usual vehicle speed for spraying. Moderate changes in vehicle speed will not affect your application rate, because such changes are compensated by automatic pressure increases or decreases.

If for any reason you need to stop, turn the MASTER boom switch to “off.”

Alarm warnings can occur momentarily while the pressure regulating valve is searching for a new setting after the closing of a boom section or other change in normal operation. However, if the alarm stays on for a longer time, the valve may have reached its limit and your system will be unable to regulate flow beyond the limit.

Boost Mode

There may be instances where "on the go" increased or decreased chemical application may be required in certain areas of your field. In situations like this, the Plus key ⊞ and Minus key ⊟ will allow you to easily make the necessary adjustments. The boost mode can be activated while spraying in the Auto mode by pressing either the Plus key ⊞ or Minus key ⊟ once. With each subsequent press of the Plus key ⊞, the application rate will be increased by 10%. Each subsequent press of the Minus key ⊟ will reduce the application rate by 10%.

If the Plus key ⊞ or Minus key ⊟ is pressed once inadvertently during operation, a delay of three seconds will deactivate the boost mode. Succeeding presses will change the target rate as explained above.

EXAMPLE: If increasing the application rate by 10%, press the Plus key ⊞ once to activate the boost mode, and a second time to make the 10% increase. If decreasing the application rate by 10%, repeat the above procedure using the Minus key ⊟ .

The application rate changes are monitored in the display, as you make them. The display will show UP 10, UP 20, dn 20, dn 30, etc. This will be displayed for approximately 3 seconds before the display returns to reading actual application rates. When making the application rate changes, it is not necessary to set the Auto/Man to "MAN" mode.

To return the application rate to its programmed status, you may use the Plus key ⊞ or Minus key ⊟ individually to step back to the application rate in 10% increments, or press them simultaneously to return to the programmed target application rate.

NOTE: While in the boost mode, the target symbol ◎ will flash at the top of the console display, to remind the operator they are not spraying at the target application rate.

Area/Volume Feature

The 844 Sprayer Control will count application acres (hectares) and measure total volume applied while the master boom switch is in the "on" position. The area counter will measure treated acres (hectares) and is dependent on the value programmed for nozzle spacing on page 15. The volume measure is dependent on flow meter pulses and is available on flow based models only.

The lower right of the display window will alternately show the treated area sprayed and the total volume applied since the last clearing of the area counter/volume measure.

To clear the area counter/volume measure, press and hold the Plus key ⊞ and Minus key ⊟ simultaneously for three (3) seconds while viewing the normal operating mode.

NOTE: The area memory counter/volume measure only works when the Master Boom Switch is turned "ON".

NOTE: If you are using a pressure based controller, the Volume feature is disabled. The total area will then be displayed at all times

Flow Rate Feature

The 844 Sprayer Control will measure a flow rate moving through the flow meter in GPM (LPM) {Imp GPM}. This feature is activated by pressing and holding the Program key 🄿 while spraying in the normal operating mode. The flow rate display replaces the area/volume display in the lower right portion of the display.

Any time the Program key 🄿 is pressed while spraying in the normal operating mode the flow rate will be displayed. Releasing the Program key 🄿 will cause the display to return to area/volume.

This feature can be used for tip calibration or for calibrating the flow meter. Refer to page 29 of this manual for flow meter calibration procedures.

NOTE: Not all 844 models contain this feature. If the display makes no change when pressing on the Program key 🄿 *while spraying in the normal operating mode, then this feature is not available with this console.*

Application Alarm

If the 844 senses a continuous discrepancy of 10% or more between the Target Application Rate and the Actual Application Rate, the application rate units (GPA, G/1000 ft^2 or l/ha) will flash in the display window. This alarms the operator to a problem with the sprayer plumbing, operation or programming.

No Flow Alarm

If the 844 stops receiving pulses from the flow meter, the turbine symbol ❋ will flash at the top of the display. This alarm indicates that the flow meter has stalled and alerts the operator that there is a problem with the flow meter or elsewhere in the system.

This alarm will occur only when the Master Boom Switch and at least one boom toggle switch is "on".

Printing

Optional printers are available for printing a spraying report directly from the 844. The optional printers are available through your TeeJet supplier. The printout that you get from the 844 contains memory information that the 844 collects. A sample of this printout is below.

To set the 844 for printing, advance to the last step of the System Setup mode and select "Prt" for the communications mode. This must only be done once.

Next, connect the printer to the 844 and make sure that the LED's to the printer are lit indicating that the printer has power. Simultaneously, press and hold the Plus key ⊞ and Minus key ⊟ for three seconds or until the printer begins printing. When the printer is finished, the area and volume counters in the lower right of the display will be reset to zero.

Disconnect the printer and continue spraying activity if necessary.

WARNING: Each time you print, the area and volume counters are reset to zero. If you do not have the printer connected and have programmed the 844 for printing capability and you are resetting the area and volume counters, the 844 console will be locked for a short period of time. The 844 is trying to print and is dumping the memory information to the printer port. When the 844 has finished dumping the information, the display will return to normal.

Figure 21: Spraying Report

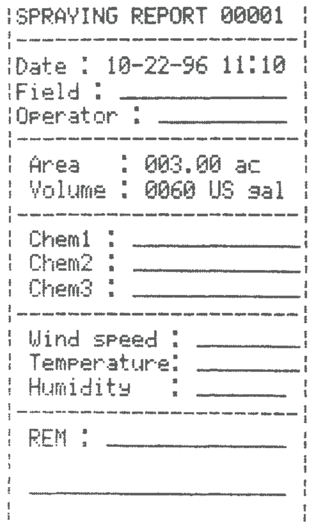

```
¦SPRAYING REPORT 00001 ¦
¦----------------------¦
¦Date : 10-22-96 11:10 ¦
¦Field : ____________  ¦
¦Operator : __________ ¦
¦----------------------¦
¦ Area   : 003.00 ac   ¦
¦ Volume : 0060 US gal ¦
¦----------------------¦
¦ Chem1 : _____________¦
¦ Chem2 : _____________¦
¦ Chem3 : _____________¦
¦----------------------¦
¦ Wind speed : ________¦
¦ Temperature: ________¦
¦ Humidity   : _______ ¦
¦----------------------¦
¦ REM : ______________ ¦
¦                      ¦
¦ ____________________ ¦
¦                      ¦
```

CHAPTER 6 - TROUBLESHOOTING GUIDE

Condition	Possible Cause	Solution
1. Application Rate Units (GPA, G/1000 ft^2 l/Ha) continually flash on/off	**A.** Continuous discrepancy of 10% or more between Target Application Rate and Actual Application Rate	Check all components and programming steps related to flow
	PROGRAMMING **B.** Flow meter pulses	In the System Setup mode, move to the Flow Meter Pulses section on page 14 of the 844 Installation Manual. Enter the factory calibrated flow meter pulse rate located on the tag accompanying the flow meter.
	C. Nozzle Selection	In the Application Setup mode, move to the Nozzle Selection section on page 29 of the 844 Installation Manual. Enter the correct color or the flow rate in US GPM (l/min) {Imp. GPM} of the tips you are using at 40 psi (2 bar). For new tips, this can be found in your TeeJet® Catalog. If the tips have been used and possibly worn, measure the flow in US Gallons Per Minute (Liters Per Minute) {Imperial Gallons Per Minute) at 40 psi (2 bar) and enter the value in the User Programmable tip programming step which can be found in the System Setup Mode on page 14 of the 844 Installation Manual.
	D. Number of spray tips per boom section	In the System Setup mode, move to the Tips Per Boom Section step on page 15 of the 844 Installation Manual. You must enter the correct number of spray tips for each boom section on your sprayer. Five boom sections are possible. If you do not use all boom section switches, make sure those not used are set to “0”. Make sure that the switch numbers being used correspond with the section numbers programmed.
2. Application Rate Units continually flash on/off	**A.** Continuous discrepancy of 10% or more between Target Application Rate and Actual Application Rate	Check all components and programming steps related to flow
	MECHANICAL **B.** Stalled meter pulses	Make sure there is no pressure in the system. Remove the flow meter from the discharge line. Inspect the inside of the meter for obstructions. The turbine should move freely. If it does not rotate easily, try flushing it out with clean water. If it remains stuck, remove the turbine by releasing the retaining clip. Clean the turbine carefully and make sure it rotates. Replace the turbine into the flow meter body and secure with the retaining clip. If you have a rapid check flow meter, remove the turbine from the flow meter body by unthreading it at the sensor. Check the turbine for obstructions. Flush with clean water or disassemble if necessary.
	C. Plugged tips	In the event of plugged nozzles, remove from boom and clean with water and a TeeJet brush. Take care not to damage the orifice.
	D. Wrong capacity tips	All tips on the boom should be of the same style, spray angle and capacity (Flow Rate). Replace any tips not matching those initially selected.
	E. Flow meter plumbed incorrectly	A flow directional arrow is located on the body of the flow meter. Plumb the flow meter with the arrow in the direction of the flow. The flow meter must be mounted 10" to 12" (25-35 cm) from other pipe fittings. See 844 Installation Manual page 7. Generally, the flow meter works better when mounted in a vertical position with the flow being directed up.
	F. Pump capacity too low	Check the pump to make sure it is working correctly. Check the plumbing system for any obstructions. Reduce Agitation Volume.
	G. Pump capacity too high	Some centrifugal pumps provide more flow than necessary for the application. A throttle valve is sometimes required to restrict the flow coming from a centrifugal pump. Increasing bypass and agitation volumes can also help when flows are too high to reach the target application.

Condition	Possible Cause	Solution
3. Flow meter turbine symbol ❊ continually flashes on/off	**A.** Stalled Flow meter	Make sure there is no pressure in the system. Remove the flow meter from the discharge line. Inspect the inside of the meter for obstructions. The turbine should move freely. If it does not rotate easily, try flushing it out with clean water. If it remains stuck, remove the turbine by releasing the retaining clip. Clean the turbine carefully and make sure it rotates. Replace the turbine into the flow meter body and secure with the retaining clip. If you have a rapid check flow meter, remove the turbine from the flow meter body by unthreading it at the sensor. Check the turbine for obstructions. Flush with clean water or disassemble if necessary. Check to ensure that the sprayer pump has been engaged while trying to spray. Check cabling for any loose connections.
4. Rate oscillation	**A.** Extreme low regulated flow	Due to very low application rates (GPA, G/1000 ft^2), (l/Ha) the regulating valve in throttling mode is operating in an almost closed position. Adjust the Reg. Valve Speed Number in the System Setup Mode (page 17) to a slower value. Plumb the regulating valve in bypass mode. This should allow the regulating valve to operate more in the center of its rotation. If you change from throttling mode to bypass mode, you must reprogram the Pressure Regulating Mode in the System Setup mode. Refer to page 16 of the 844 Installation Manual.
5. Sprayer stops spraying while in Auto Mode.	**A.** Pressure Regulating Mode is programmed incorrectly	Check the Pressure Regulating Mode in the System Setup mode of the 844. Refer to page 16 of the 844 Installation manual to insure that the controller has been correctly programmed for the regulating valve position on your sprayer.
	B. Flow meter stalled	A flashing turbine symbol ❊ will also indicate if the flow meter has stalled. Inspect flow meter for obstructions. If flow meter turbine is impaired, clean and replace. Sometimes when the regulating valve closes too far, maybe even complete shut-off (with ball type regulating valves), this can cause the flow meter to stall and no flow or pressure regulation will occur. Press the Auto/Manual key so that the LED indicates “MAN” mode, depress the Plus key ⊞ for approximately three (3) seconds. You should see the tips begin to spray. Press the Auto/Manual key so that the LED indicates “Auto” mode, and continue to spray.

Condition	Possible Cause	Solution
6. Application Rate Units (GPA, G/1000 ft^2 l/Ha) continually flash on/off	**A.** Speed sensor not calibrated correctly	Recalibrate the magnetic or radar speed pulses in the Calibrate Speed section of the System Setup Mode on page 18 of the 844 Installation Manual
	B. Incorrect nozzle spacing	Check the Nozzle Spacing section in the System Setup Mode on page 15 of the 844 Installation Manual to ensure the correct nozzle spacing has been entered. This number should reflect the distance between nozzles in inches or (cm) on the boom. If banding, enter the band width as your spacing. If directed spraying enter the row spacing divided by the number of nozzles per row
	C. Incorrect capacity nozzles	The Nozzle Selection section in the Application Setup Mode on page 21 of the 844 Installation Manual does not match closely enough to the tips on the boom. Compare the value in this section with the flow rate of the nozzles being used at 40 psi (2 bar).
	D. Flow meter pulses incorrect	In the System Setup mode, move to the Flow meter Pulses section on page 14 of the 844 Installation manual. Enter the factory flow meter pulse rate located on the tag accompanying the flow meter. It might be necessary to recalibrate the flow meter. Follow the flow meter calibration procedure(s) on pages 30-32 of this manual.
	E. Speed sensor installed incorrectly	One or more of the wheel sensor magnets are not consistently sending a pulse to the monitor. The distance between the sensor and the magnets is incorrect. Ground debris can accidentally move the sensor out of position. The red LED on the back side of the sensor should be lit when placed within the correct distance form the magnets. A proximity sensor has an orange LED on the top of the sensor that should be lit when placed within the correct distance from the sensing surface.
	F. Radar installed incorrectly	Precise installation of the Radar is critical to it working correctly. Thoroughly review the manual provided with the Radar sensor you are using.
7. No regulation in Auto Mode	**A.** No speed sensing	Check speed sensor to ensure it is sending pulses to the controller. Check the Calibrate Speed section in the System Setup Mode on page 18 of the 844 Installation Manual to ensure speed sensors are correctly calibrated.
	B. Regulating valve malfunction	Check wiring from controller to the regulating valve. Make sure there is voltage to the regulating valve. Both wires leading to the regulating valve are 12V(+). With the Master Switch on, and the console set to MAN Mode when either the Plus key ⊞ or Minus key ⊟ is pushed, the appropriate wire goes to ground (–) to complete the circuit.

CHAPTER 7 - FLOW METER CALIBRATION

The flow meter supplied with your system has been calibrated at the factory and under normal circumstances there may be no need to re-calibrate it. However, the factory calibration setup may not reflect specific sprayer plumbing. Before spraying actual chemicals, the flow meter should be checked for proper calibration. Also, the flow meter is made up of moving parts and can wear over time. If you feel that your flow meter is worn, you can re-calibrate your flow meter using the 844 console. To do so, use either of the following methods:

Method 1 – Known Volume

Step 1 – Known Value

Select a known volume of water (n) that you will pump through the flow meter. In these steps, 10 US gallons (38 liters) {8 Imperial gallons} will be used as an example. The specific volume you use is not important, although larger volumes generally produce more accurate results.

Step 2 – Programming Calibration Number

Go into the System Setup mode and advance to the flow meter calibration number step (flashing turbine at the top of the display). In this programming step, enter (n) 10 US gallons (38 liters) {8 Imperial gallons} as the calibration number. Exit the System Setup mode by pressing and holding the key for five seconds.

Step 3 – Resetting Volume Counter

Reset the total volume number that is displayed in the lower right portion of the display. (Display alternates between Ac (Ha) covered and the volume sprayed through the flow meter). To reset this number, press and hold the Plus key ⊞ and Minus key ⊟ simultaneously for three (3) seconds or until you see the values reset to zero.

Step 4 – Spraying Known Volume

Engage the pump on the sprayer, flip the Master boom section of the 844 to “ON” (make sure at least one boom section switch is on), and pump exactly (n) 10 US gallons (38 liters) {8 Imperial gallons} through the flow meter. When the known volume is reached, shut the Master boom switch “OFF”.

Step 5 – Entering in New Flow meter Calibration Number

The number that is displayed in the lower right corner of the display is your new flow meter calibration number. Record this number, enter the System Setup mode and advance to the flow meter calibration number step. Enter the new value from your test into this step and then exit the System Setup mode.

Step 6 – Double-checking the New Value

Double-check your new value by spraying a larger volume of water, such as 100 US gallons (378 liters){83 Imperial gallons} through the flow meter. Before spraying the larger volume, make sure to reset the memory counters by depressing and holding the Plus key ⊞ and Minus key ⊟ simultaneously for three (3) seconds.

NOTE: After double checking the new calibration number, if you find that the volume shown on the display of the 844 is more than +/- 3% in error, change the flow meter calibration number in the System Setup mode by the % difference it is in error.

Method 2 – Known Tip Size Method

Step 1 – Check Tip Size

Determine what size tip is on the sprayer. An actual flow collection should be done on a representative sample to ensure the tips are not worn. To do this, set the boom pressure at 40 psi (2 bar). This must be pressure at the tips (i.e. use manual pressure gauge mounted on the boom). Collect flow for 1 minute from 1 tip.

Example: XR8004 tip should spray 0.4 gallons in 1 minute (1.29 LPM) {0.32 Imp Gal}

Step 2 – Count Tips

Count the total number of tips to be used for measure. You can use 1 boom section, 2 boom sections, etc.

Example: Boom Section 1 has 10 tips

Step 3 – Calculated Flow

Multiply the number of tips to be measured by the size (or individual flow rate) of each tip.

Example: 10 tips x 0.4 GPM (1.29 LPM) {0.32 Imp GPM} = 4GPM (12.9 LPM) {3.2 Imp GPM}

Step 4 – Measure

Turn controller on and activate pump. Toggle on the Master Boom Switch and the number of boom sections to be measured. Insure that the pressure at the boom is maintained at 40 psi (2 bar). While spraying press and hold the Program key P in. Look at the lower right display to see if the measured flow matches the calculated flow.

Step 5 – Adjustments

If the measured flow does not match the calculated flow, the flow meter number may need to be adjusted. If the measured flow is higher than the calculated flow, the flow meter calibration number needs to be decreased. If the measured flow is lower than the calculated flow, the flow meter calibration number needs to be increased.

Example: Calculated flow is 4.00 GPM (12.9 LPM)
{3.20 Imp GPM}; measured flow is 3.6 GPM
(11.6 LPM) {2.88 Imp GPM}

$$4.0\text{ GPM} - 3.6\text{ GPM} = 0.4\text{ GPM} \quad \frac{0.4\text{GPM}}{4.00\text{GPM}} = 0.1 \times 100 = 10\%$$

$$12.9\text{ LPM} - 11.6\text{ LPM} = 1.3\text{ LPM} \quad \frac{1.3\text{LPM}}{12.9\text{LPM}} = 0.1 \times 100 = 10\%$$

$$3.2\text{ Imp GPM} - 2.88\text{ Imp GPM} = 0.32\text{ Imp GPM} \quad \frac{0.32\text{ Imp GPM}}{3.2\text{ Imp GPM}} = 0.1 \times 100 = 10\%$$

Decrease the flow meter calibration number by 10%. If original number was 650, enter 585 for this programming value.

844-E
SPRAYER CONTROL
USER MANUAL

- Full-featured sprayer control with industry-leading ease of use
- Large back-lit display shows all spraying information at a glance
- Color-coded tip selection for easy programming
- Communication Port for PC and GPS interfacing
- Flow or pressure based regulation options provide reliability and flexibility
- Five boom section switches plus master shutoff
- Built in application planning tool
- Durable, weather-resistant aluminum housing
- Single cable connection for quick hookup

TeeJet® TECHNOLOGIES

1801 Business Park Drive
Springfield, Illinois 62703 USA
www.teejet.com

A Subsidiary of Spraying Systems Co.®

98-70006-ENUS R4 English-US

© TeeJet Technologies 2013